DRAWING No.	SHT.		THIRD ANGLE PROJECTION		DO NOT SCALE	Q.A.		H/S SETT	
152035	1 OF 1 SHTS.			BS 8888	IF IN DOUBT ASK	H/S Q.A.		REL. INSP.	
						H/S PROD		EXT.ISS.CODE	7/12

© THE COPYRIGHT OF THIS DRAWING IS RESERVED BY HELLERMANN TYTON. IT IS ISSUED ON CONDITION THAT IT IS NOT COPIED, REPRODUCED OR DISCLOSED TO A THIRD PARTY EITHER WHOLLY OR IN PART WITHOUT THE CONSENT IN WRITING OF HELLERMANN TYTON.

STANDARD PART (AFTER UNRESTRICTED RECOVERY)

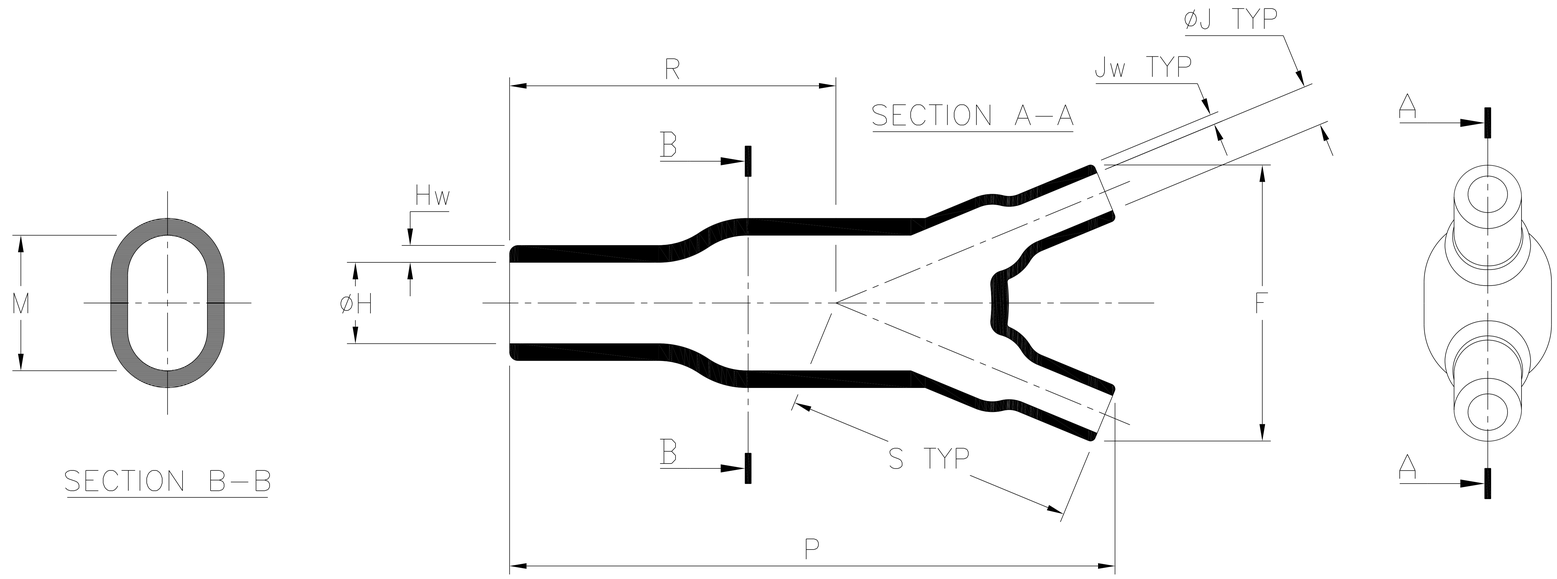

EXPANDED (AS SUPPLIED)

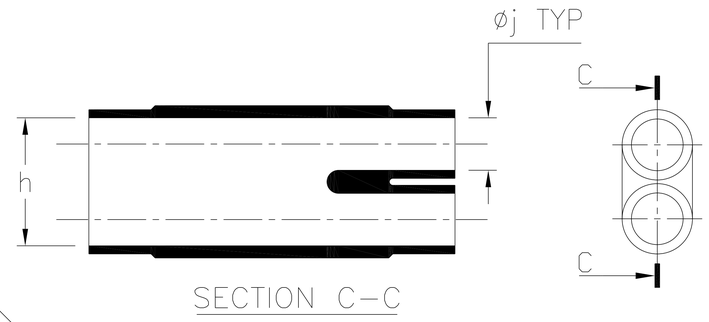

SPEC.	PART NO.	EXPANDED DIMENSIONS (AS SUPPLIED)		RECOVERED DIAMETERS		RECOVERED DIMENSIONS						
		h	øj	øH	øJ	F	M	P	R	S	Hw	Jw
		MIN	MIN	MAX	MAX	±15%	MAX	±15%	NOM	NOM	±30%	±30%
VG 95343 T08C001A	206–1	13.0 (.51)	7.0 (.28)	6.0 (.24)	3.0 (.12)	19.0 (.75)	13.0 (.51)	41.0 (1.61)	22.0 (.87)	19.0 (.75)	1.5 (.06)	1.0 (.04)
–	206–2	14.0 (.55)	9.0 (.35)	6.0 (.24)	3.0 (.12)	19.0 (.75)	13.0 (.51)	41.0 (1.61)	22.0 (.87)	19.0 (.75)	1.5 (.06)	1.0 (.04)
* –	206–3	10.0 (.39)	6.0 (.24)	6.5 (.25)	3.0 (.12)	19.0 (.75)	13.0 (.51)	36.0 (1.42)	17.0 (.67)	19.0 (.75)	1.6 (.06)	1.1 (.04)
–	206–7	10.0 (.39)	6.0 (.24)	6.5 (.25)	3.0 (.12)	19.0 (.75)	13.0 (.51)	41.0 (1.61)	22.0 (.87)	19.0 (.75)	1.6 (.06)	1.1 (.04)
VG 95343 T19C006A	206–8	13.0 (.51)	12.0 (.47)	6.1 (.24)	3.0 (.12)	19.0 (.75)	13.0 (.51)	41.0 (1.61)	22.0 (.87)	19.0 (.75)	1.5 (.06)	1.0 (.04)

* 206–3 CUT DOWN TO BE TRIMMED FROM THE H–END OF THE SHAPE

OPTIONAL FILLER PORT DETAIL			
SPEC.	PART NO.	RECOVERED DIMENSIONS	
		X	Y
		±20%	±20%
VG 95343 T09C001A	206–1	18.0 (.71)	28.0 (1.1)
–	206–2	18.0 (.71)	28.0 (1.1)
–	206–3	13.0 (.51)	23.0 (.91)
–	206–7	18.0 (.71)	28.0 (1.1)
–	206–8	18.0 (.71)	28.0 (1.1)

OPTION TO STANDARD PART
FILLER PORT (CODE P)

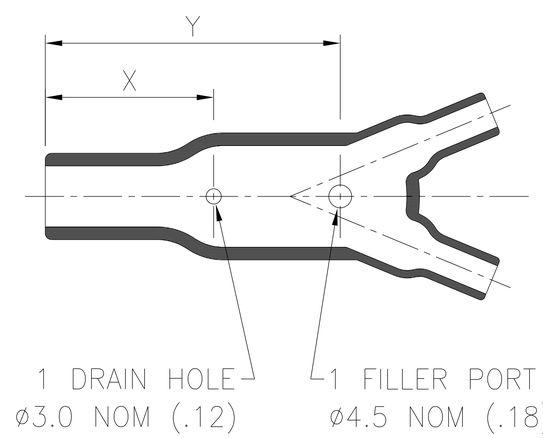

Heatshrinkable Moulded Shapes Bulbous Boots 2-Way Outlet HellermannTyton For information only, not subject to technical changes.

ISSUE	NOTE No.	DRAWN	DATE
9	P1610	KH	15/11/17
8	P1502	GL	27/04/15
7	P1497	GB	05/02/15
6	P1487	CB	06/11/14
5	P1353	L.F.	14/07/11

HellermannTyton
William Prance Road,
Plymouth International Med. & Tech. Park,
Plymouth, PL6 5WR
Tel ++44 (0) 1752 701261
Fax ++44 (0) 1752 790058

NAME	S.Almond	SCALE	NTS	ADHESIVE	A3 ORIGINAL SHEET SIZE 420mm x 297mm	SHT. 1 OF 1 SHTS.
DATE	26/03/08	DIMS IN	mm (in)			
TITLE	2 WAY OUTLET SLEEVE			PART No.	206	DRAWING No. 152035