DRAWING No.	SHT. 1 OF 1 SHTS.	© THE COPYRIGHT OF THIS DRAWING IS RESERVED BY HELLERMANN TYTON. IT IS ISSUED ON CONDITION THAT IT IS NOT COPIED, REPRODUCED OR DISCLOSED TO A THIRD PARTY EITHER WHOLLY OR IN PART WITHOUT THE CONSENT IN WRITING OF HELLERMANN TYTON.	THIRD ANGLE PROJECTION	BS 8888	DO NOT SCALE IF IN DOUBT ASK	Q.A.		H/S SETT	
152074						H/S Q.A.		REL. INSP.	
						H/S PROD		EXT.ISS.CODE	12

STANDARD PART (AFTER UNRESTRICTED RECOVERY)

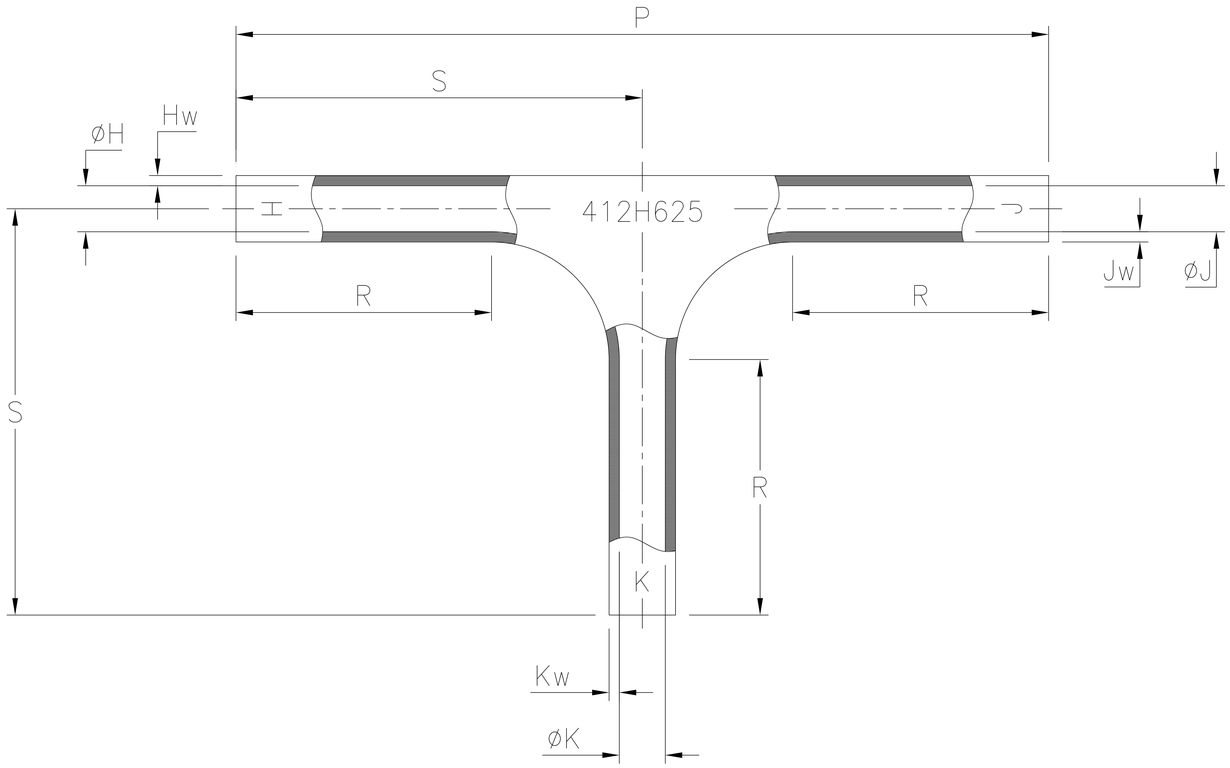

EXPANDED (AS SUPPLIED)

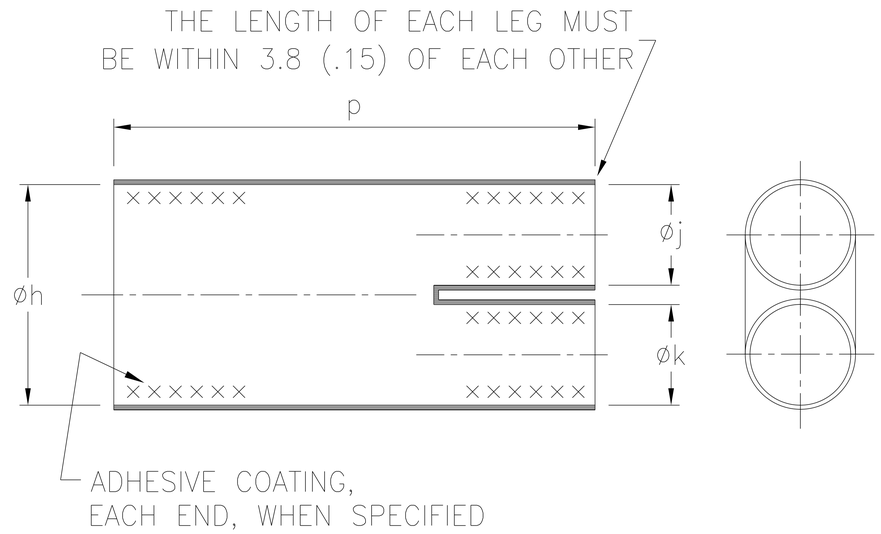

PART NO.	EXPANDED DIMENSIONS (AS SUPPLIED)			RECOVERED DIAMETERS		RECOVERED DIMENSIONS			
	øh	øj,k	p	øH	øJ,K	P	R	S	Hw,Jw,Kw
	MIN	MIN	TOL	MAX	MAX	NOM	±10%	NOM	NOM
412H625-*	83.3 (3.28)	54.9 (2.16)	162.6 ±16.5 (6.40 ±.65)	33.3 (1.31)	33.3 (1.31)	242.4 (9.54)	88.9 (3.50)	121.2 (4.77)	1.8 (.07)

* ALL MATERIAL CODES

NOTE : Hw, Jw AND Kw APPLIES TO 80% OF THE CIRCUMFERENCE ONLY.

ISSUE	NOTE No.	DRAWN	DATE
3	P1599	CM	18/10/17
2	P1304	DNH	09/02/10
1	P1192	S.Almond	03/04/08

HellermannTyton
William Prance Road,
Plymouth International Med. & Tech. Park,
Plymouth, PL6 5WR
Tel ++44 (0) 1752 701261
Fax ++44 (0) 1752 790058

NAME	S.Almond	SCALE	NTS	ADHESIVE	A3 ORIGINAL SHEET SIZE 420mm x 297mm	SHT. 1 OF 1 SHTS.
DATE	03/04/08	DIMS IN	mm (in)			
TITLE	TEE SLEEVE			PART No. 412H625	DRAWING No. 152074	