DRAWING No.	SHT. 1 OF 1 SHTS.	© THE COPYRIGHT OF THIS DRAWING IS RESERVED BY HELLERMANN TYTON. IT IS ISSUED ON CONDITION THAT IT IS NOT COPIED, REPRODUCED OR DISCLOSED TO A THIRD PARTY EITHER WHOLLY OR IN PART WITHOUT THE CONSENT IN WRITING OF HELLERMANN TYTON.	THIRD ANGLE PROJECTION	BS 8888	DO NOT SCALE IF IN DOUBT ASK	Q.A.		H/S SETT	
152286						H/S Q.A.		REL. INSP.	
						H/S PROD		EXT.ISS.CODE	2/12

STANDARD PART (AFTER UNRESTRICTED RECOVERY)

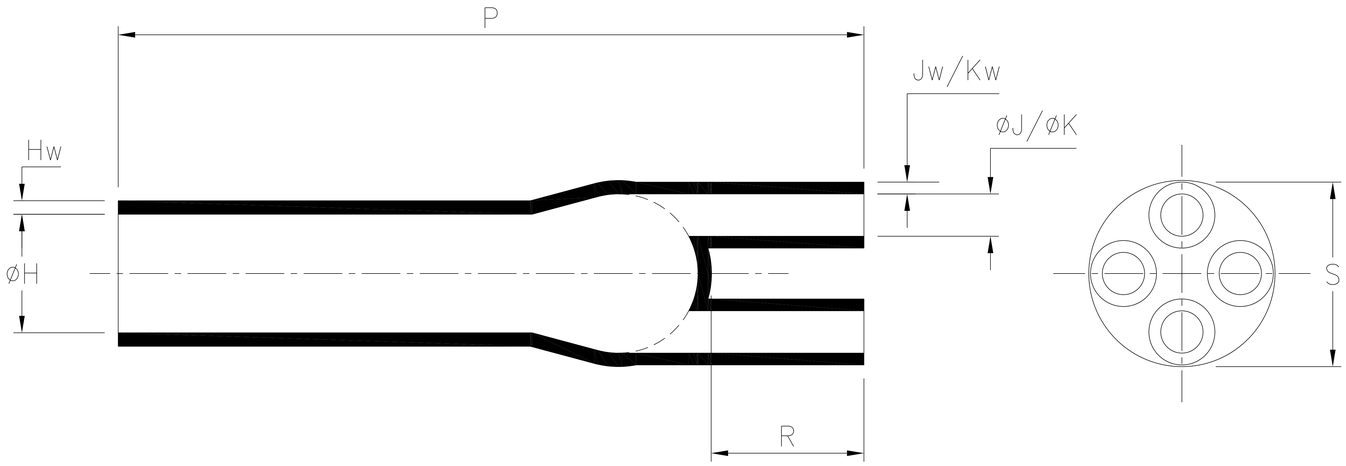

EXPANDED (AS SUPPLIED) 435-6

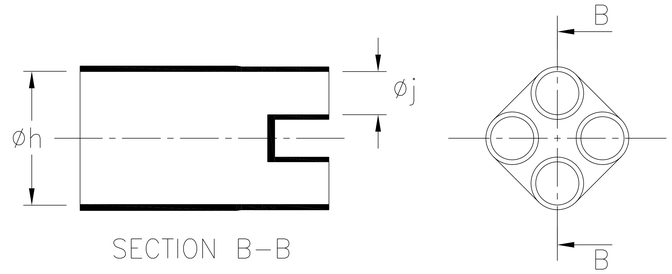

EXPANDED (AS SUPPLIED) 435-2

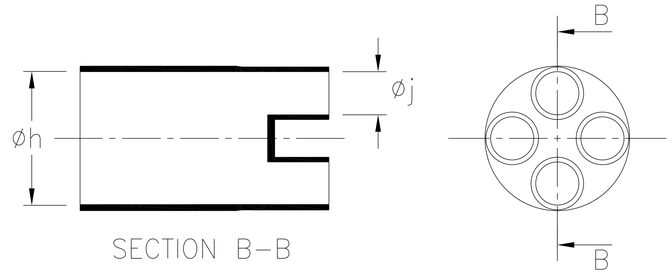

EXPANDED (AS SUPPLIED) 435-4

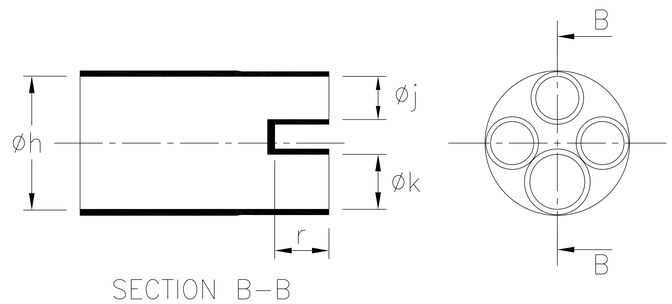

NAVSEA PART	PART No.	EXPANDED DIAMETERS (AS SUPPLIED)			EXPANDED DIMENSIONS		RECOVERED DIAMETERS			RECOVERED DIMENSIONS					
		øh	øj	øk	r		øH	øJ	øK	P	R	S	Hw	Jw	Kw
		MIN	MIN	MIN	MIN	MAX	MAX	MAX	MAX	±10%	NOM	NOM	±20%	±20%	±20%
1A62-13	435-2	32.0 (1.26)	13.0 (0.51)	–	–	–	20.32 (0.80)	4.82 (0.19)	4.82 (0.19)	93.5 (3.68)	28.5 (1.12)	27.0 (1.06)	2.86 (0.11)	2.86 (0.11)	–
–	435-4	30.5 (1.20)	8.1 (0.32)	9.4 (0.37)	23.0 (0.90)	31.7 (1.25)	20.32 (0.80)	4.82 (0.19)	4.82 (0.19)	93.5 (3.68)	28.5 (1.12)	27.0 (1.06)	2.86 (0.11)	2.86 (0.11)	2.86 (0.11)
–	435-6	58.0 (2.28)	19.0 (0.75)	–	–	–	20.32 (0.80)	4.82 (0.19)	4.82 (0.19)	93.5 (3.68)	28.5 (1.12)	27.0 (1.06)	2.86 (0.11)	2.86 (0.11)	–

ISSUE	NOTE No.	DRAWN	DATE
2	P1618	KH	11/12/17
1	P1435	GB	19/11/13

HellermannTyton
William Prance Road,
Plymouth International Med. & Tech. Park,
Plymouth, PL6 5WR
Tel ++44 (0) 1752 701261
Fax ++44 (0) 1752 790058

NAME	GB	SCALE	NTS	ADHESIVE	A3 ORIGINAL SHEET SIZE 420mm x 297mm	SHT. 1 OF 1 SHTS.
DATE	19/11/13	DIMS IN	mm (in)			
TITLE	4 WAY OUTLET SLEEVE			PART No.	435	DRAWING No. 152286