DRAWING No.	SHT. 1 OF 1 SHTS.	© THE COPYRIGHT OF THIS DRAWING IS RESERVED BY HELLERMANN TYTON. IT IS ISSUED ON CONDITION THAT IT IS NOT COPIED, REPRODUCED OR DISCLOSED TO A THIRD PARTY EITHER WHOLLY OR IN PART WITHOUT THE CONSENT IN WRITING OF HELLERMANN TYTON.	THIRD ANGLE PROJECTION	BS 8888	DO NOT SCALE IF IN DOUBT ASK	Q.A. / H/S Q.A. / H/S PROD	H/S SETT / REL. INSP. / EXT.ISS.CODE 5/12
152029							

STANDARD PART (AFTER UNRESTRICTED RECOVERY)

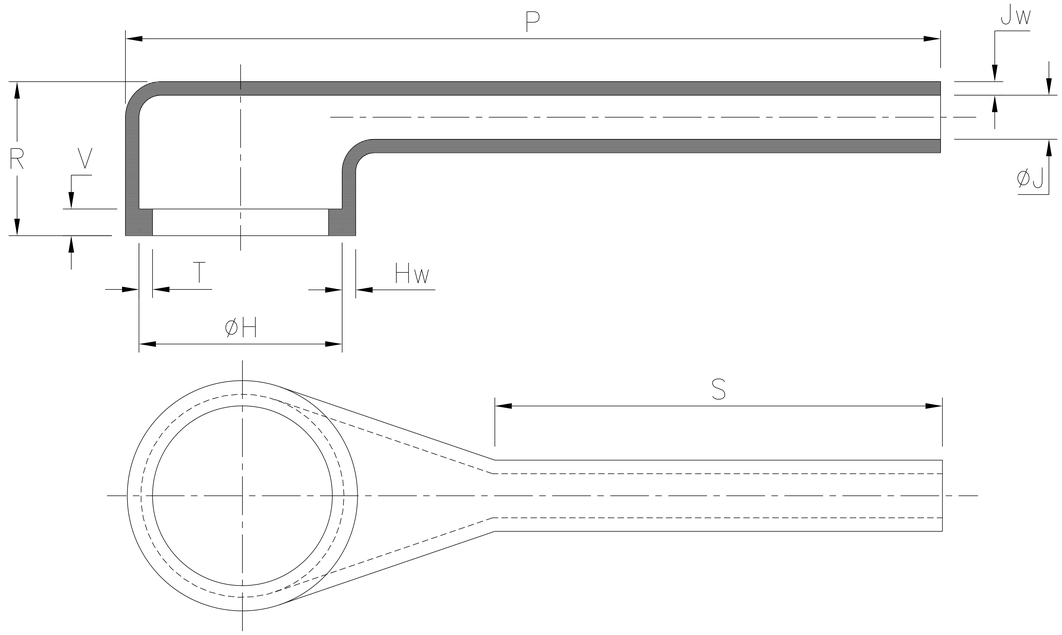

EXPANDED (AS SUPPLIED)

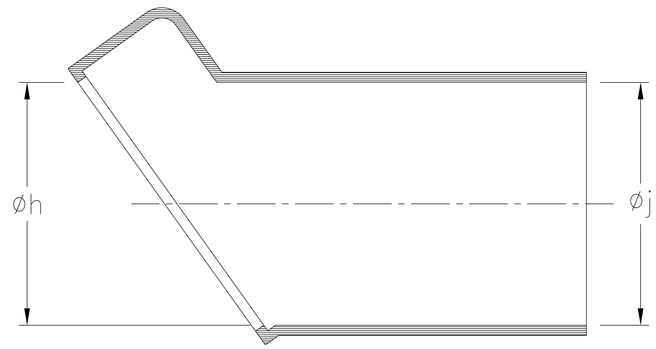

OPTIONS TO STANDARD PART

FILLER PORT/DRAIN HOLES (CODES P, D AND P1)

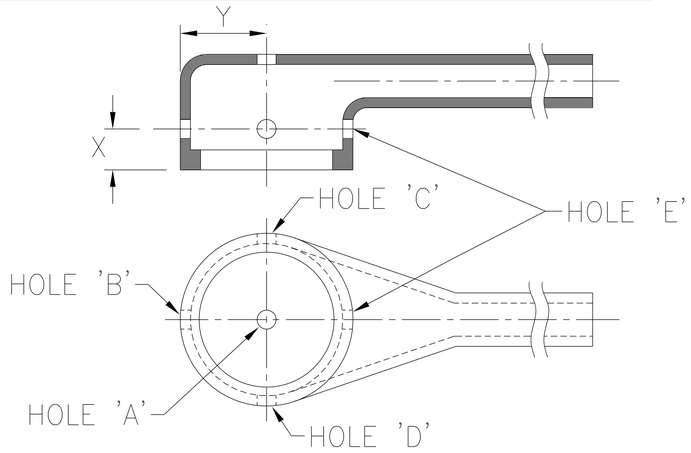

SPEC.	PART NO.	EXPANDED DIAMETERS (AS SUPPLIED)		RECOVERED DIAMETERS		RECOVERED DIMENSIONS						
		øh	øj	øH	øJ	P	R	S	T	V	Hw	Jw
		MIN	MIN	MAX	MAX	±10%	±10%	NOM	±20%	MAX	±20%	±30%
VG 95343 T06F007A	1127–1	50 (1.97)	50 (1.97)	41.5 (1.63)	14.5 (.57)	132 (5.20)	30 (1.18)	81 (3.19)	1.7 (.07)	3.3 (.13)	2.3 (.09)	1.4 (.055)
–	1127–3	50 (1.97)	50 (1.97)	41.1 (1.62)	14.5 (.57)	65 (2.56)	29.5 (1.16)	14 (.55)	1.7 (.07)	3.3 (.13)	2.3 (.09)	1.4 (.055)
Mil Spec	1127–4	50 (1.97)	50 (1.97)	41.1 (1.62)	14.5 (.57)	224.5 (8.84)	29.5 (1.16)	173.5 (6.83)	1.7 (.07)	3.3 (.13)	2.3 (.09)	1.4 (.055)
–	1127–5	50 (1.97)	50 (1.97)	41.5 (1.63)	14.5 (.57)	92.2 (3.75)	30 (1.18)	41 (1.61)	1.7 (.07)	3.3 (.13)	2.3 (.09)	1.4 (.055)
–	1127–52	50 (1.97)	26 (1.02)	41.5 (1.63)	14.5 (.57)	224.5 (8.84)	30 (1.18)	173.5 (6.83)	1.7 (.07)	3.3 (.13)	2.3 (.09)	1.4 (.055)

OPTIONAL FILLER PORT/DRAIN HOLES DETAIL			
SPEC.	PART NO.	RECOVERED DIMENSIONS	
		X	Y
		±20%	±20%
VG 95343 T07F007A	1127–1	20 (.79)	22 (.87)
–	1127–3	20 (.79)	22 (.87)
Mil Spec	1127–4	11.9 (.47)	22 (.87)
–	1127–5	20 (.79)	22 (.87)
–	1127–52	20 (.79)	22 (.87)

CODE & TYPE		RECOVERED HOLE DETAILS
P	FILLER PORT	HOLES 'A' & 'B' ONLY 'A' ø3mm NOM (.12) 'B' ø4.5mm NOM (.18)
D	DRAIN HOLES	4 HOLES 'A', 'B', 'C' and 'D' ALL 4 HOLES ø3mm NOM (.12)
P1	FILLER PORT (ALT)	HOLE 'B' ONLY 'B' ø4.5mm NOM (.18)
D5	DRAIN	5 HOLES 'A', 'B', 'C', 'D' and 'E'

Heatshrinkable moulded shapes bulbous Right-Angle Shapes, VG style/MIL style

For information only, not subject to technical changes.

ISSUE	NOTE No.	DRAWN	DATE
4	P1526	DC	13/11/15
3	P1393	CM	03/09/12
2	P1344	C.M.	03/10/11
1	P1184	S.Almond	20/03/08

HellermannTyton
William Prance Road,
Plymouth International Med. & Tech. Park,
Plymouth, PL6 5WR
Tel ++44 (0) 1752 701261
Fax ++44 (0) 1752 790058

NAME	S.Almond	SCALE	NTS	ADHESIVE	A3 ORIGINAL SHEET SIZE 420mm × 297mm	SHT. 1 OF 1 SHTS.
DATE	20/03/08	DIMS IN	mm (in)			
TITLE	RT. ANGLE SLEEVE			PART No.	1127	DRAWING No. 152029