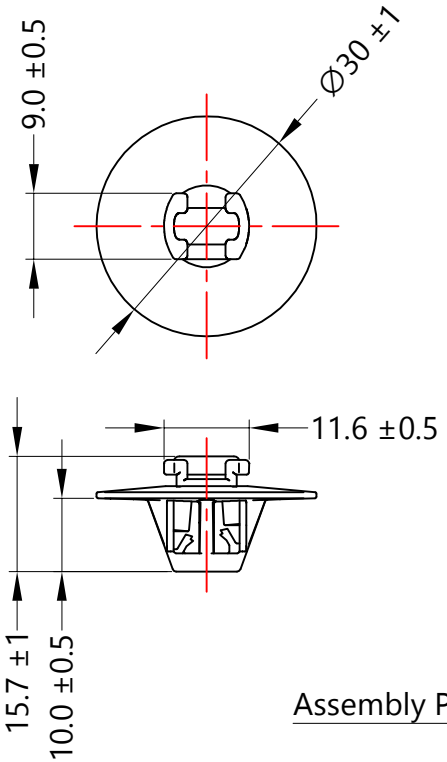

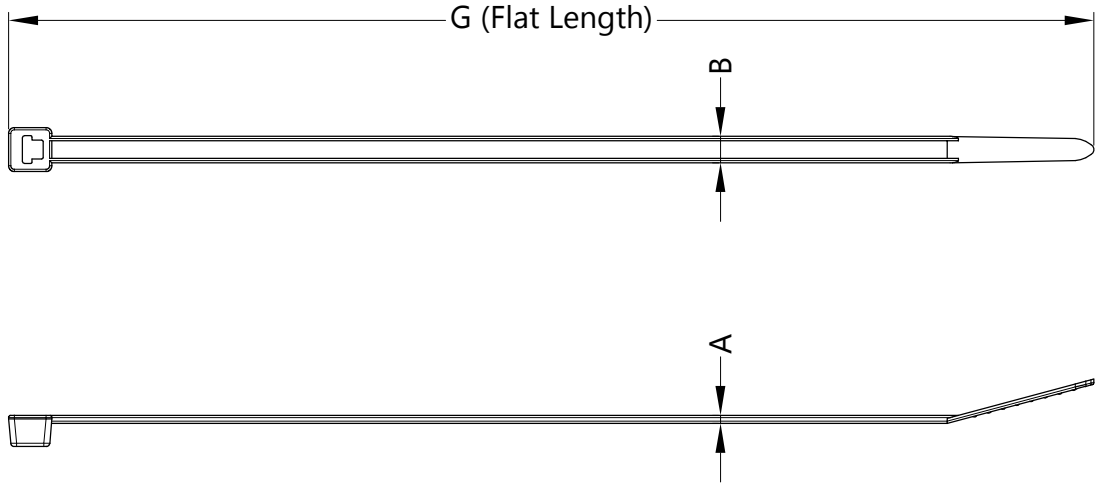

Assembly Possibilities

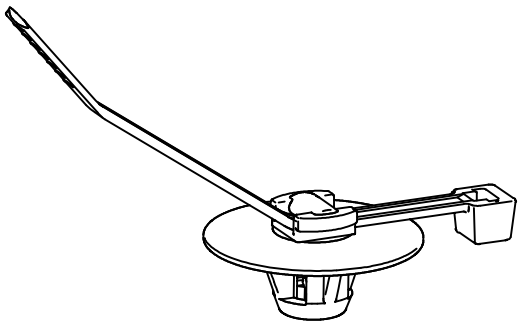

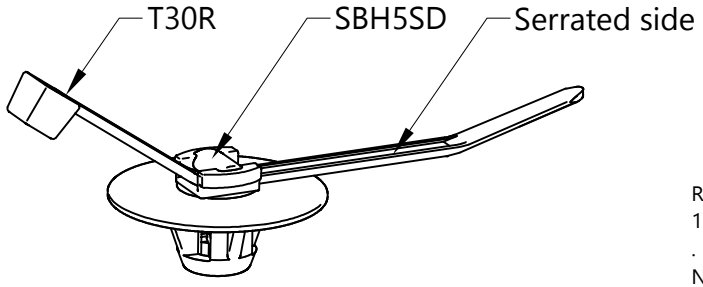

A	B	G
1.1 ±0.2	3.5 ±0.2	150 ±5

Reference:
1. Cable tie min loop tensile strength 135 newtons (30 lbf)
.
Notes:
Material: PA 66
Bundle range: Ø1.5 to Ø35mm
Intended for welding screw size: Ø5mm

Revision Level			Revision Record
Drawing	State	Part	ECN #SG14062-02
00.0	Released	.	
Changed	Date (YYYY/MM/DD)		
Simon Ng	2020/11/15		
Approved	Date (YYYY/MM/DD)		
Edward Tan	2020/11/15		

All drawing revisions are stored in CAD PDM database

The copyright of this drawing is reserved by HellermannTyton.

Drawn	Date (YYYY/MM/DD)
Simon Ng	2014/08/14
Approved	Date (YYYY/MM/DD)
Edward Tan	2014/08/14

Units: **mm**

HellermannTyton
www.HellermannTyton.com

Title: T30RSBH5SD-SET

Drawing-No: **00-0929-006-CSH**

Scale: 1 : 1
Global Project Number: 00-0929
Format: A4
Sheet: 1 / 1