Revision NO 变更数	Revisions 变更项	Changed 修改者	Date 日期	Approved 确认者	Date 日期
1	Add Material	Yancey.Yu	2019-06-26	Kevin.Tang	2019-06-26

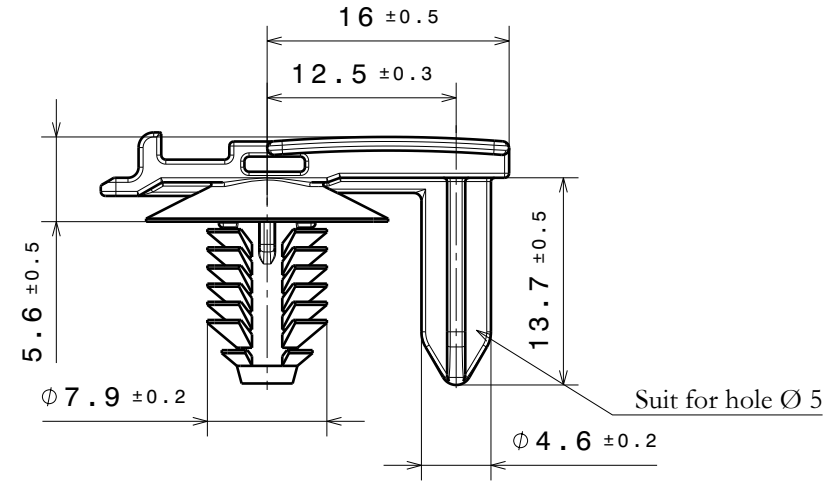

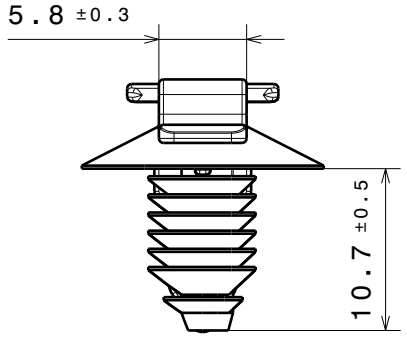

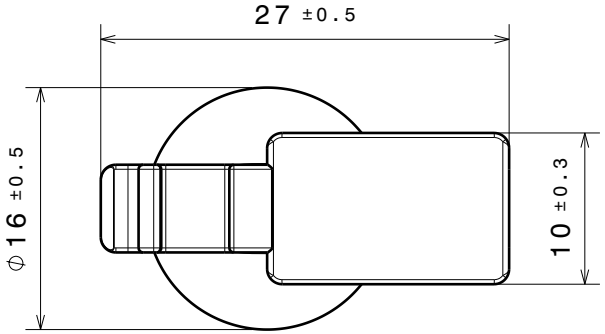

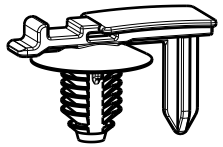

Product Type	Meterial	Color
FT6LG Connect-TS	PA66HIRHS	Black
FT6LG Connect-TS	PA46	Gray

1

Hole Size
适用孔径
Φ6.4-7.1mm

Panel Thickness
适用板厚
0.7-5.1mm

Material 材料
See Table

Dimension Units
尺寸单位mm

PERFORMANCE
性能
SPECIFICATION
标准

CATIA V5

Drawn/制图	Billy.Zhu	2019-01-30
Approved/审核	Kevin.Tang	2019-01-30

Scale/比例 2:1

Title/品名

FT6LG Connect-TS

The copyright of this drawing is reserved by HellermannTyton.
it is issued on condition that it is not reproduced,copied or disclosed to a third party,either wholly or in part, without the consent of HellermannTyton.

HellermannTyton
海尔曼太通（无锡）电器配件有限公司
(WUXI) Electrical Accessories Co.,Ltd.
Tel:+86-510-5282536
Fax:+86-510-5280112

Drawing-No/图号
02-0307-001-CSC

Format/格式
A4