Revision Level		Revision Record	Changed	Date	Approval	Date
Part	Drawing					
	1	Updated pictogramme and drawing template.	SIMON NG	11-July-19	Edward Tan	11-July-19
	1.1	Added HT Global project Number.	SIMON NG	11-July-19	Edward Tan	11-July-19
	1.2	Added cable tie dimensions chart	SIMON NG	11-July-19	Edward Tan	11-July-19
	1.3	Remove chart panel thickness and remove tie head dimensions.	SIMON NG	11-July-19	Edward Tan	11-July-19

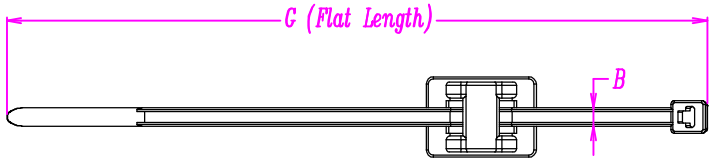

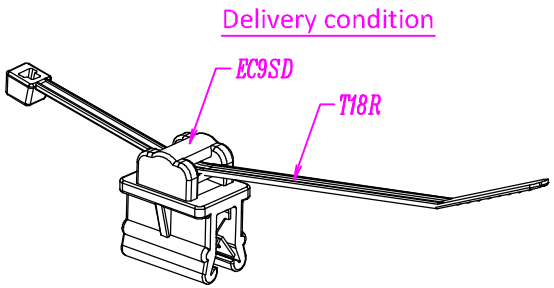

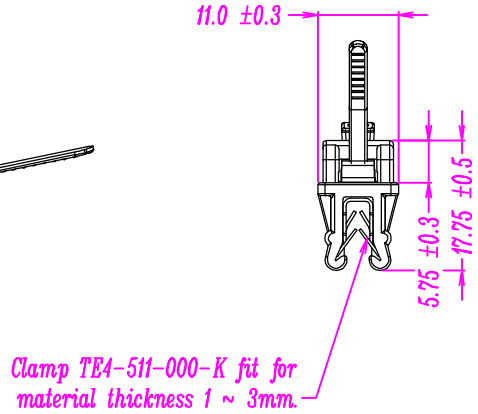

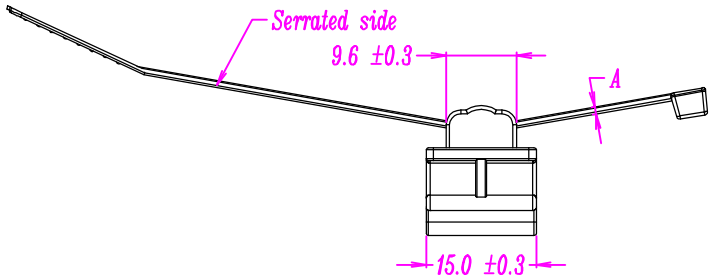

1.2

A	B	G
1.0 ±0.2	2.5 ±0.2	100.0 ±5.0

Bundle ø Max.
1.5 ~ 22mm

Material
P.A. 66

Tensile strength
80N (Minimum)

PERFORMANCE SPECIFICATION

ACAD

The copyright of this drawing is reserved by HELLERMANNTYTON.
It is issued on condition that it is not reproduced, copied or disclosed to a third party, either wholly or in part, without the consent of HELLERMANNTYTON.

Drawn	MANDY ONG	05 Dec 2013
Approved.	EDWARD TAN	05 Dec 2013

HellermannTyton
545, Yishun Industrial Park A
Yishun Avenue 7
Singapore 768741
Tel: (+65) 6852 8585
Fax: (+65) 6756 6798

Scale: 1 : 1

Reference: 14.1629

Title
T18REC9SD

Uncontrolled Document

Drawing-No [SG13050-01]
02-0371-001-CSH 1.1

Format A4

Sheet 1 of 1