| Revision Level | | Revision Record | Changed | Date | Approval | Date |
|---|---|---|---|---|---|---|
| Part | Drawing | | | | | |
| | 1 | Revise dimension to 9.6 ±0.5 was 9.6 ±0.3 | Mandy Ong | 06-Dec-13 | Edward Tan | 06-Dec-13 |
| | 2 | Updated pictogramme and drawing template. | SIMON NG | 17-July-19 | Edward Tan | 17-July-19 |
| | 2.1 | Added HT Global project Number. | SIMON NG | 17-July-19 | Edward Tan | 17-July-19 |
| | 2.2 | Added cable tie dimensions chart | SIMON NG | 17-July-19 | Edward Tan | 17-July-19 |

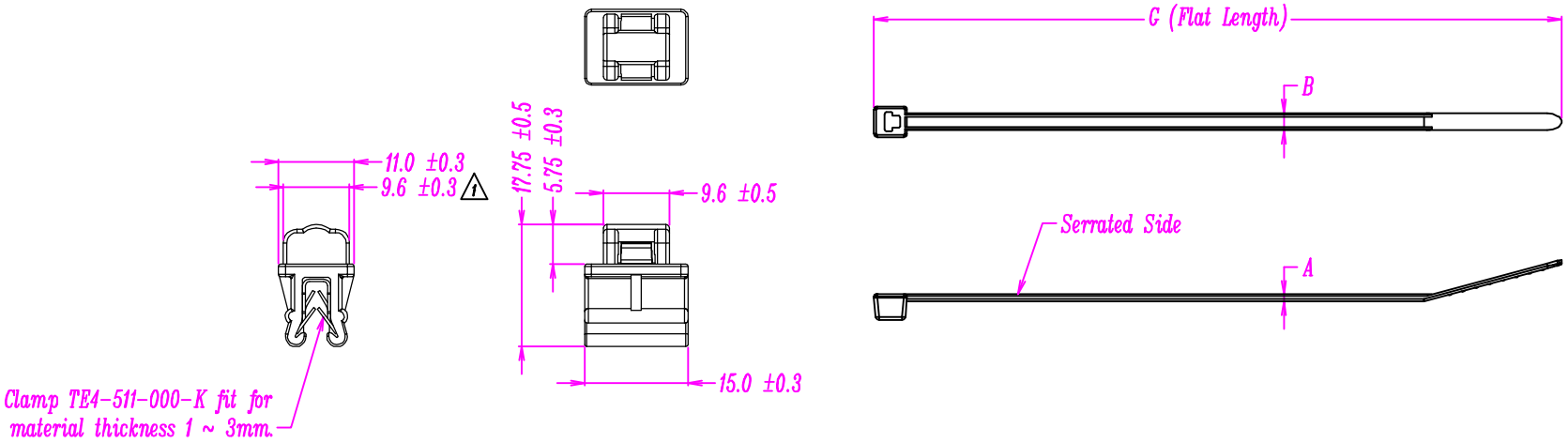


Assembly example

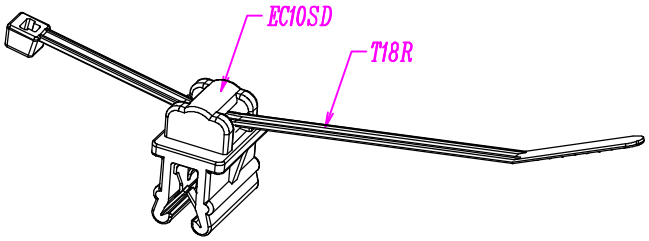


| 2.2 A | B | G |
|---|---|---|
| 1.0 ±0.2 | 2.5 ±0.2 | 100.0 ±5.0 |

Bundle ø Max.
1.5 ~ 22mm
.

Material
P.A. 66
.

Tensile strength
80N (Minimum)
.

PERFORMANCE SPECIFICATION

ACAD

The copyright of this drawing is reserved by HELLERMANNTYTON.
It is issued on condition that it is not reproduced, copied or disclosed to a third party, either wholly or in part, without the consent of HELLERMANNTYTON.

| | | |
|---|---|---|
| Drawn | MANDY ONG | 18 Nov 2013 |
| Approved. | EDWARD TAN | 18 Nov 2013 |

HellermannTyton
545, Yishun Industrial Park A
Yishun Avenue 7
Singapore 768741
Tel: (+65) 6852 8585
Fax: (+65) 6756 6798

Scale: 1 : 1

Reference: 14.1911

Title
T18REC10SD-SET

Uncontrolled Document

Drawing-No [SG13042-02]
02-0383-015-CSH 2.1

Format A4

Sheet 1 of 1