Revision NO 变更数	Revisions 变更项	Changed 修改者	Date 日期	Approved 确认者	Date 日期

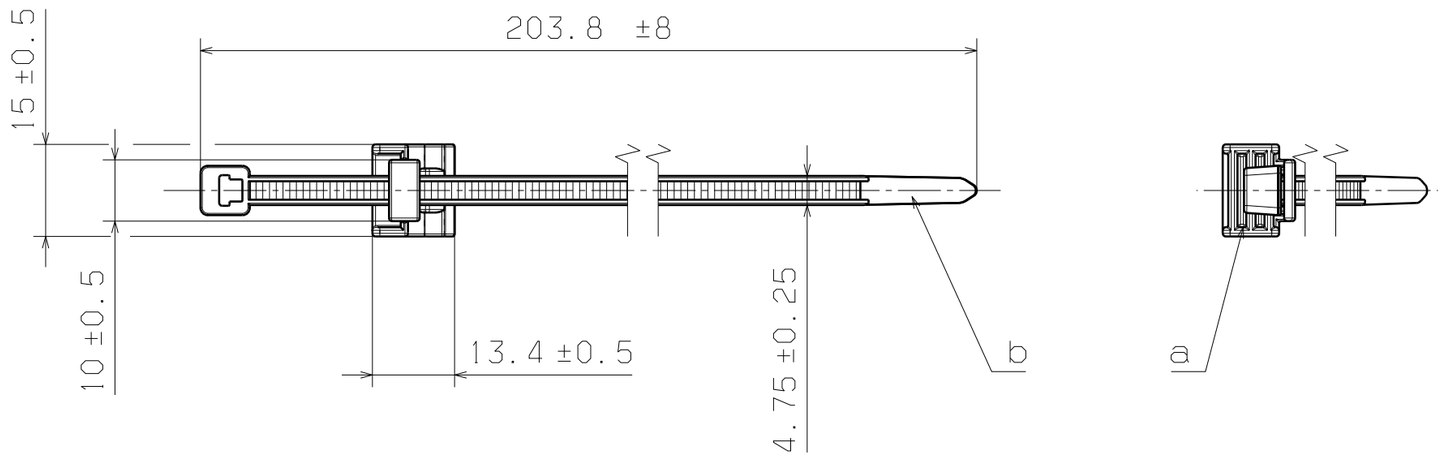

a:EC21
b:T50R-PP

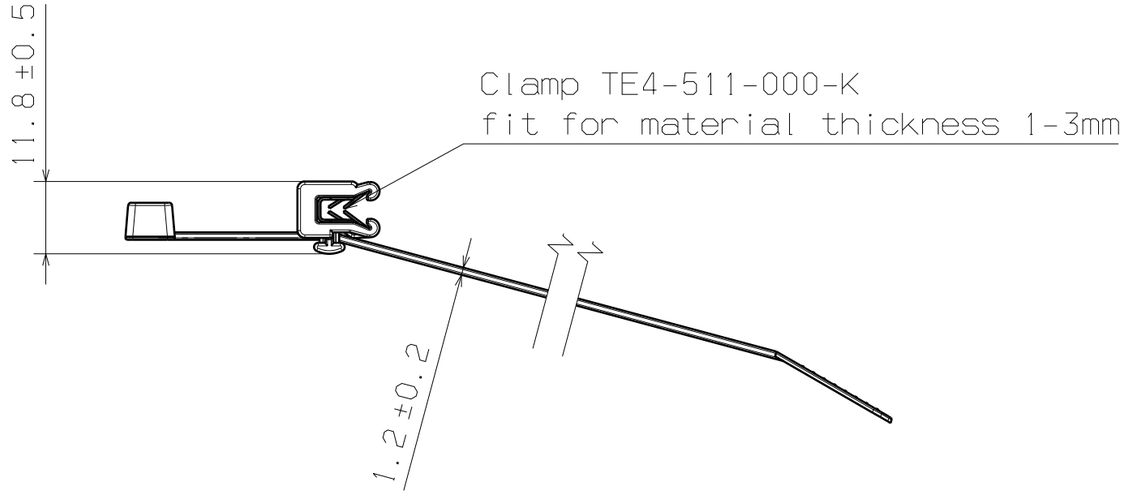

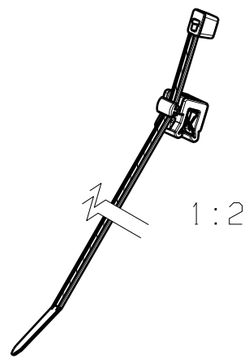

Tensile Force (N)
环形拉断力
min. 110N

Bundle Dia
捆绑直径
6 - 45mm

Panel Thickness
适用板厚
1 - 3mm

Material/材料:
a: PA66HIRHS-BK
b: PP-BK

Dimension Units/尺寸单位
mm

PERFORMANCE/性能
SPECIFICATION/标准

CATIA V5

Drawn/制图	Lance.Lv	2017-11-25
Approved/审核	Kevin.Tang	2017-11-25

Scale/比例 NO /无

Title/品名

T50REC21-PP-PA66

The copyright of this drawing is reserved by HellermannTyton.it is issued on condition that it is not reproduced,copied or disclosed to a third party,either wholly or in part,without the consent of HellermannTyton.

HellermannTyton
海尔曼太通（无锡）电器配件有限公司
(WUXI) Electrical Accessories Co.,Ltd.
Tel:+86-510-5282536
Fax:+86-510-5280112

Drawing-No/图号
04-0813-006-CSC

Format/格式
A3