Revision Level		Revision Record	Changed	Date	Approval	Date
Part	Drawing					
	1	Table A added.	SIMON NG	30-Mar-15	Edward Tan	30-Mar-15
	2	Updated pictogram and drawing template.	SIMON NG	18-Oct-19	Edward Tan	18-Oct-19
	2.1	Added HT Global project number.	SIMON NG	18-Oct-19	Edward Tan	18-Oct-19
	2.2	Remove part description.	SIMON NG	18-Oct-19	Edward Tan	18-Oct-19

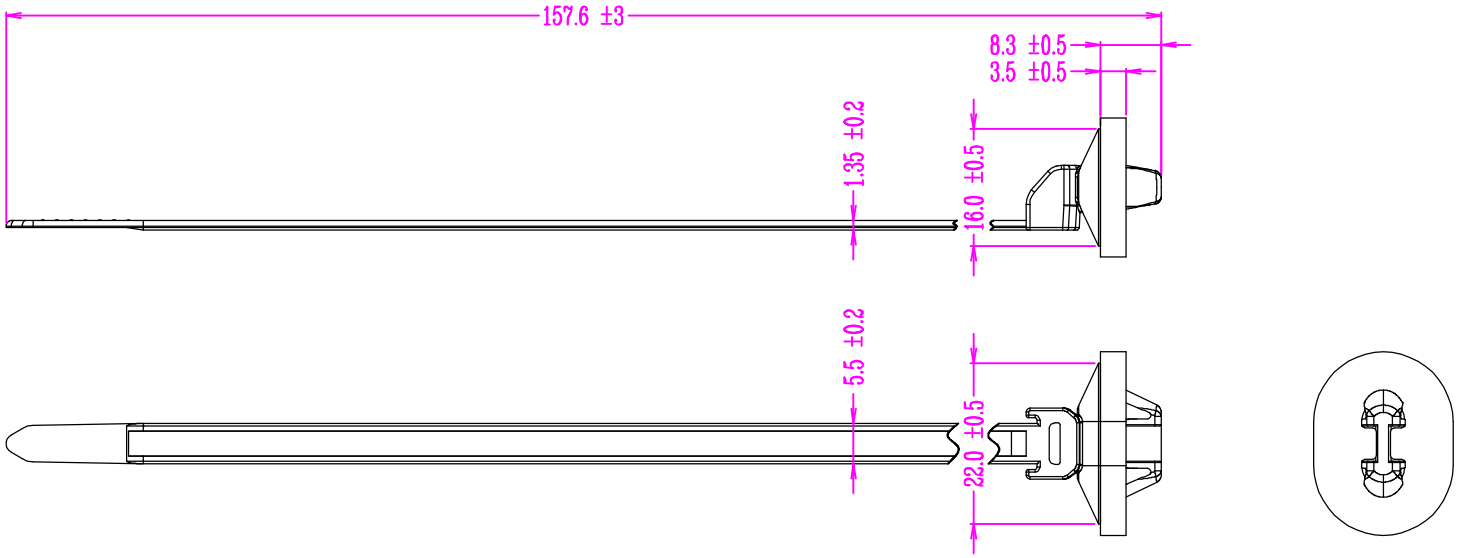

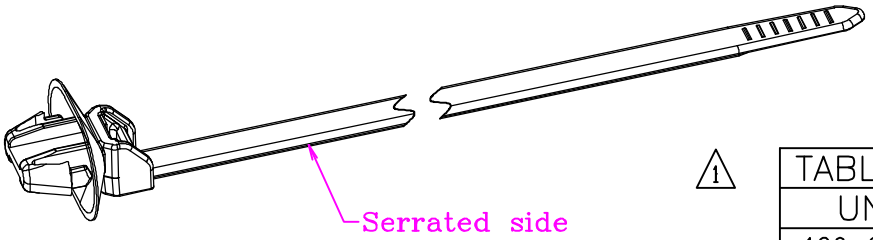

1

TABLE A.		
UNS	MATERIAL	COLOR
126-00076	PA66HS	Natural

Oval Hole Size	6.5 x 13mm
Panel Thickness	0.6 ~ 2.0mm
Bundle ø Max	ø1.6 ~ ø30mm
Tensile strength	300N (Minimum)

PERFORMANCE SPECIFICATION

ACAD

The copyright of this drawing is reserved by HELLERMANNTYTON.
It is issued on condition that it is not reproduced, copied or disclosed to a third party, either wholly or in part, without the consent of HELLERMANNTYTON.

Drawn	MANDY ONG	21 July 2011
Approved.	EDWARD TAN	21 July 2011

HellermannTyton
545, Yishun Industrial Park A
Yishun Avenue 7
Singapore 768741
Tel: (+65) 6852 8585
Fax: (+65) 6756 6798

Scale: 1 : 1

Reference: 14.2313

Title

T60SOSSFT65X130-E-MD

Uncontrolled Document

Drawing-No [SG11014-02]

05-0115-004-CSH 2.1

Format A4

Sheet 1 of 1