| Revision Level | | Revision Record | Changed | Date | Approval | Date |
|---|---|---|---|---|---|---|
| Part | Drawing | | | | | |
| | 1 | Updated pictogram and drawing template. | SIMON NG | 04-Oct-19 | Edward Tan | 04-Oct-19 |
| | 1.1 | Added HT Global project Number. | SIMON NG | 04-Oct-19 | Edward Tan | 04-Oct-19 |

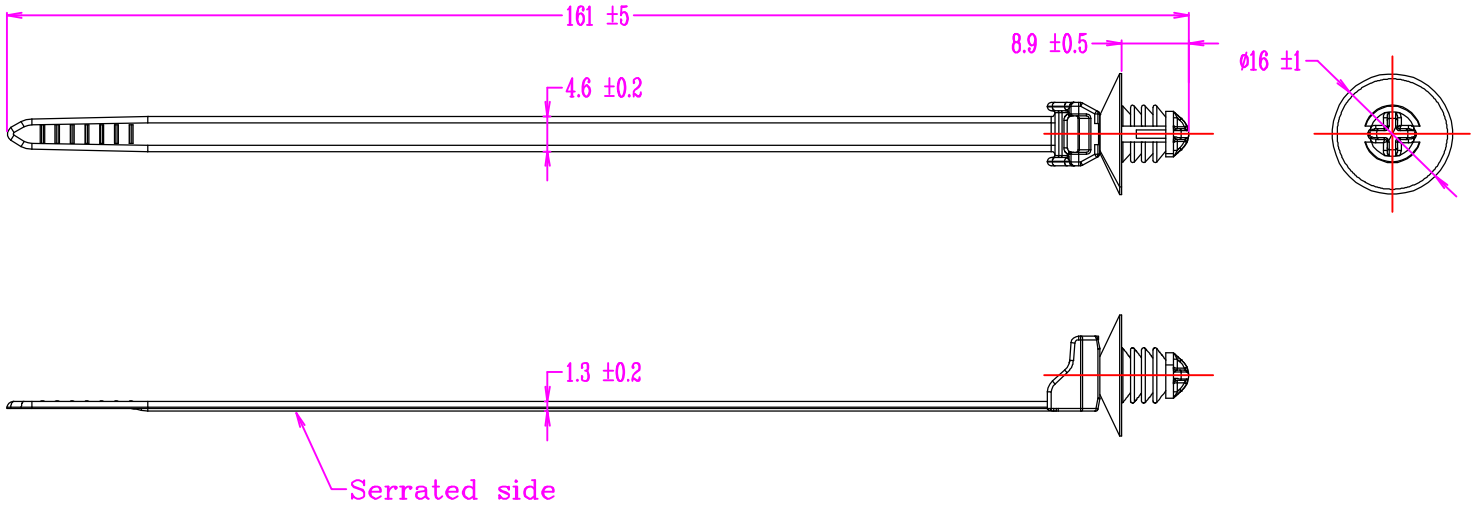


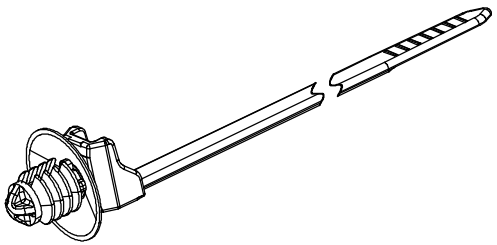

| | |
|---|---|
| Hole Size : | ø6.3 ~ ø7mm |
| Panel Thickness : | 0.6 ~ 4.2mm |
| Bundle ø Max. | ø1 ~ ø35mm |
| Material | P.A. 66 |
| Tensile strength | 180N (Minimum) |
| PERFORMANCE SPECIFICATION | |

ACAD

The copyright of this drawing is reserved by HELLERMANNTYTON.
It is issued on condition that it is not reproduced, copied or disclosed to a third party, either wholly or in part, without the consent of HELLERMANNTYTON.

| | | |
|---|---|---|
| Drawn | MANDY ONG | 25 Aug 2011 |
| Approved. | EDWARD TAN | 25 Aug 2011 |

HellermannTyton
545, Yishun Industrial Park A
Yishun Avenue 7
Singapore 768741
Tel: (+65) 6852 8585
Fax: (+65) 6756 6798

Scale: 1 : 1

Reference: 09-0222-001-CSG

Title

T50SOSFT6E2

Uncontrolled Document

Drawing-No [SG11017-01]

09-0222-001-CSH 1.1

Format A4

Sheet 1 of 1