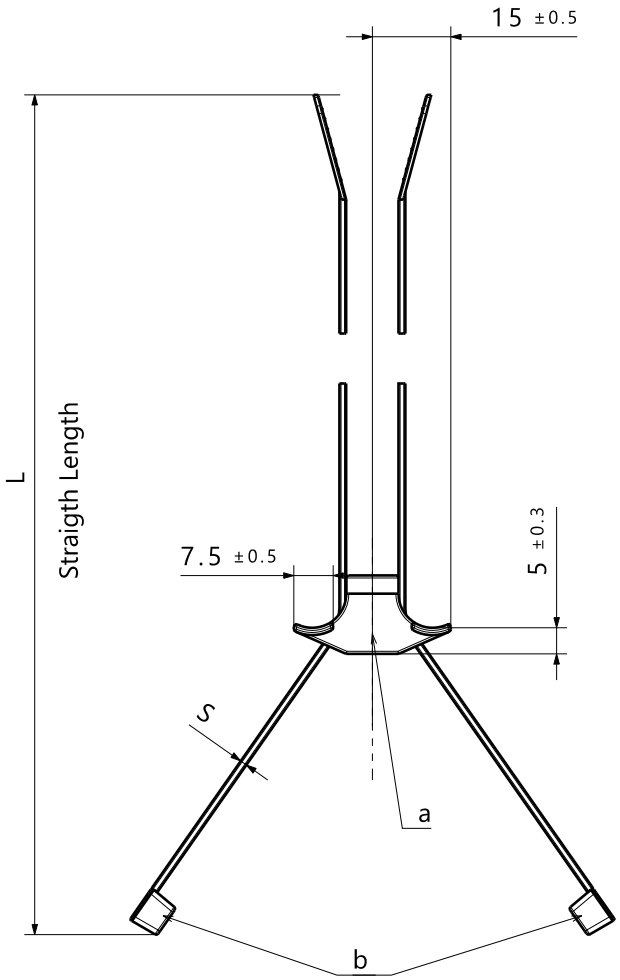

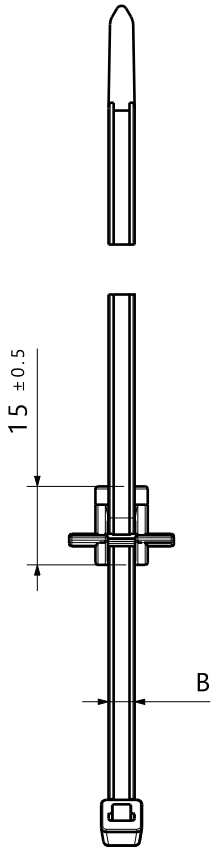

View Without Cable Tie

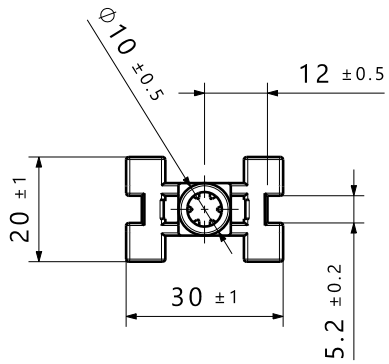

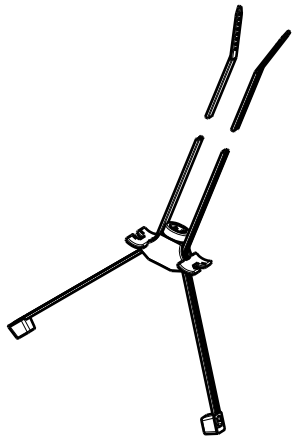

Scale 1:2

a:Socket DSBS5 and
b:Cable tie T80I
being:Fixing tie T80IDSBS5

Product Type	L	B	S	Intended For Weld Screw	Material a	Material b	Tensile Force	Bindle Max
T80IDSBS5	300±10	5±0.5	1.3±0.2	M5	PA66HIRHS	PA66HS	MIN.355N	85mm

Revision Level		
Drawing	State	Part
00.0	Design Release	
Changed	Date (YYYY/MM/DD)	
Approved	Date (YYYY/MM/DD)	

Revision Record

All drawing revisions are stored in CAD PDM database

The copyright of this drawing is reserved by HellermannTyton.

Drawn	Date (YYYY/MM/DD)
Yancey.Yu	2020/09/04
Approved	Date (YYYY/MM/DD)
Kevin.Tang	2020/09/04

Units: mm

HellermannTyton
www.HellermannTyton.com

Title: T80IDSBS5

Drawing-No: 09-0377-001-CSC

Scale: 1:1
Global Project Number: 09-0377
Format: A3
Sheet: 1 / 1