Revision NO 变更数	Revisions 变更项	Changed 修改者	Date 日期	Approved 确认者	Date 日期

The manufacturing-related geometry changes (injection point, ejectors marks, etc.) allowed. Design of the details are left to suppliers discretion.

Delivery condition
Socket MB3APT
2:1

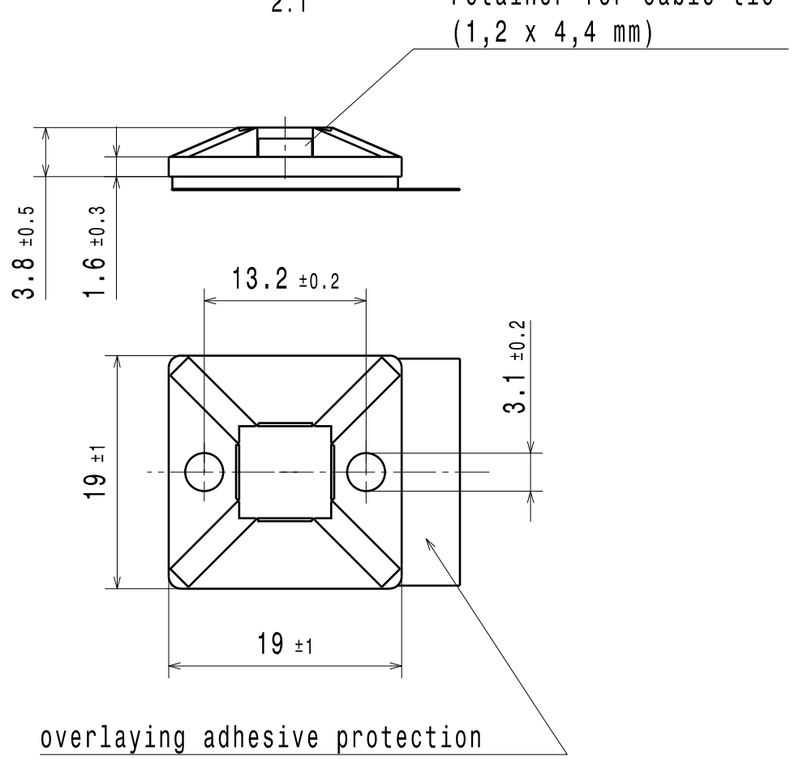

Delivery condition
Cable tie T...
2:1

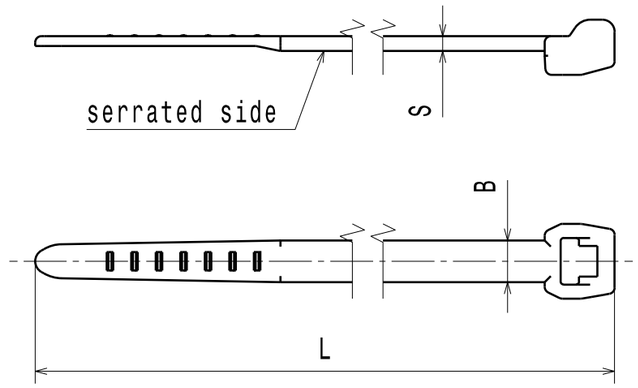

Assembly example
1:1

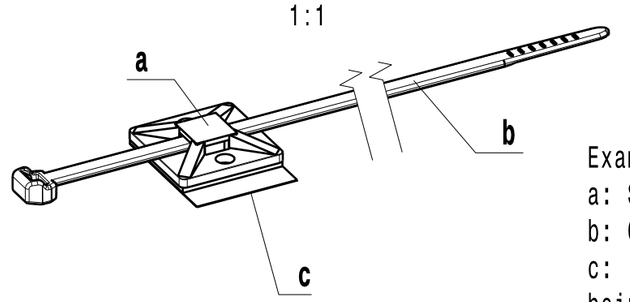

Example of designation:
a: Socket MB3APT-A
b: Cable tie T30ROS
c: ACRYLIC FOAM
being: Fixing tie
T30ROSMB3APT-A-SET

Bundle Dia
捆绑直径

See Table

Material/材料:

a: PA66
b: PA66
c:Doppelseitiges SolidTack-Klebeband (Acrylat PX) / SolidTack self adhesive pad (Acrylate PX)

Dimension Units/尺寸单位
mm

PERFORMANCE/性能
SPECIFICATION/标准

semi-finished part		Project no.
a	MB3APT	GPN 11-0679
b	T30ROS	NT 822-99
c	ACRYLIC FOAM	-

line	Product type	Project no.	Length L	Strap width B	Thickness S	Bundle Ø max.	Tensile force N min.
1	T30ROSMB3APT-A-SET	GPN 10-0899	145 ±5	3.4 ±0.2	1.2 ±0.2	30	135

CATIA V5

Drawn/制图	Lance.Lv	2018-08-01	Scale/比例 NO /无	2:1 1:1
Approved/审核	Kevin.Tang	2018-08-01	Title/品名	

Fixing tie...MB3APT-A-SET

The copyright of this drawing is reserved by HellermannTyton.it is issued on condition that it is not reproduced,copied or disclosed to a third party,either wholly or in part,without the consent of HellermannTyton.

HellermannTyton
海尔曼太通（无锡）电器配件有限公司
(WUXI) Electrical Accessories Co.,Ltd.
Tel:+86-510-5282536
Fax:+86-510-5280112

Drawing-No/图号
10-0899-003-CSC

Format/格式
A3