Revision NO/变更数	Revisions/变更项	Changed	Date	Approved	Date
①	Size update Drawing NO. change from QDQ311-C1B-00 to 19-0714-001-CSC	Lance.Lv	20190404	Kevin.Tang	20190404
②	Drawing NO. change from 19-0714-001-CSC to 10-0991-001-CSC	Lance.Lv	20200526	Kevin.Tang	20200526

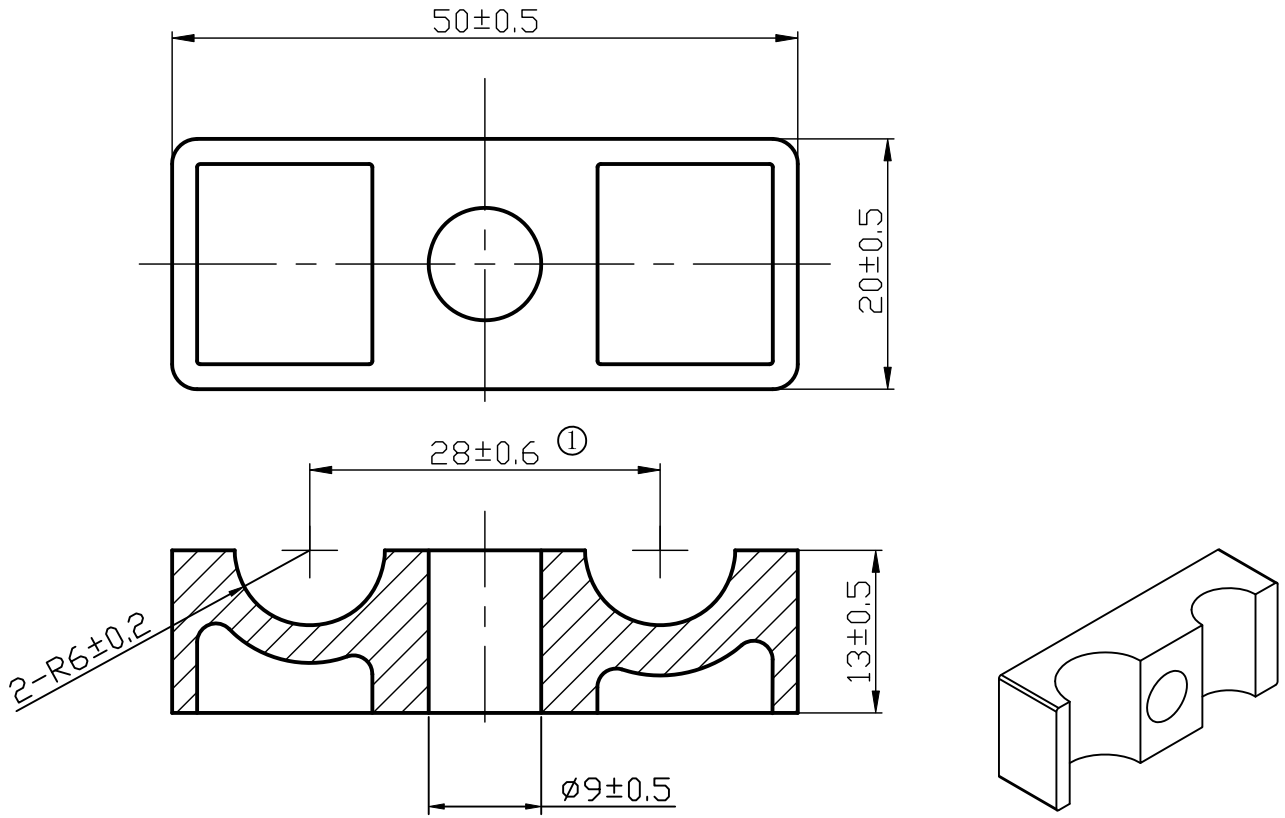

Technical requirements/技术要求:

1. No burr, sharp point and other defective phenomenon on surface;表面无毛刺、尖角等不良现象;
2. The color is black, no obvious defective phenomenon such as white dots;
颜色为黑色，无明显白点等现象;

Hole size/适合孔径:
ø12*ø12

Material/材料:
PA66-BK

Dimension Units/尺寸单位
mm

PERFORMANCE / 性能
SPECIFICATION /标准

CAD

Drawn/制图	Kevin.tang	29/Nov/2010
Approved/审核	吉本一纪	13/Dec/2010

Scale/比例 NO /无

Title/品名

DTC12*12

the copyright of this drawing is reserved by HELLERMANNTYTON.
it is issued on condition that it is not reproduced,copied or disclosed to a third party,either wholly or in part,without the consent of HELLERMANNTYTON.

HellermannTyton
海尔曼太通（无锡）电器配件有限公司
(WUXI) Electrical Accessories Co.,Ltd.
Tel:+86-510-5282536
Fax:+86-510-5280112

Drawing-No/图号
10-0991-001-CSC ①②

Format/格式
A4