Revision No. 变更数	Revisions 变更事项	Changed 修改者	Date 日期	Approved 确认者	Date 日期
①	Add material table	Josh.Liu	2019-09-05	Kevin.T	2019-09-05

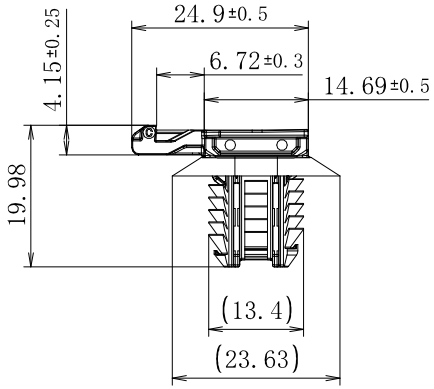

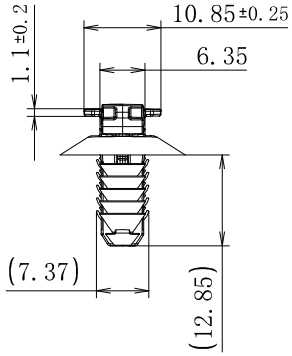

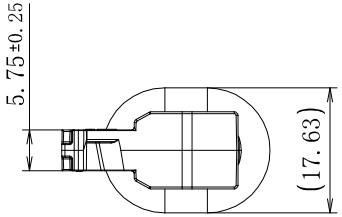

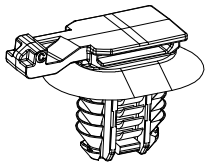

SCALE 1:1

Hole Size/
适配孔径
6.2x12.2±0.2mm
6.5x12.5±0.2mm
6.5x13.0±0.2mm
7.0x12.0±0.2mm

Panel Thickness/
适配板厚
0.6-6.0mm

①

UNS	Material	Color
151-02533	PA66HIRHS	Black
151-02447	PA66HIRHS	Natural
151-03135	PA46	Grey

Dimensional Range	0-3	≥3-6	≥6-30	≥30-120	Angle
Tolerance	±0.2	±0.3	±0.5	±0.8	±2°

Material/材料
See Table

NX 10.0

Drawn/制图	Josh.Liu	2017-07-25	Scale/比例 1:1
Approved/审核	Roger.C	2017-07-25	

Demension Units/
单位 MM

PERFORMANCE/性能
SPECIFICATION/标准

The copyright of this drawing is reserved by HELLERMANNTYTON.
it is issued on condition that it is not reproduced,copied or disclosed to a third party,either wholly or in part,without the consent of HELLERMANNTYTON.

HellermannTyton
海尔曼太通（无锡）电器配件有限公司
(WUXI) Electrical Accessories Co.,Ltd.
Tel:+86-510-85282536
Fax:+86-510-85280112

Title/品名
CCOVAL

Drawing-No./图号
11-0156-001-CSC

Format 格式 A4

Page 页数 1/1