Revision NO 变更数	Revisions 变更项	Changed 修改者	Date 日期	Approved 确认者	Date 日期
1	Modify Part Name	Lance.Lv	2016-11-14		2016.11.14

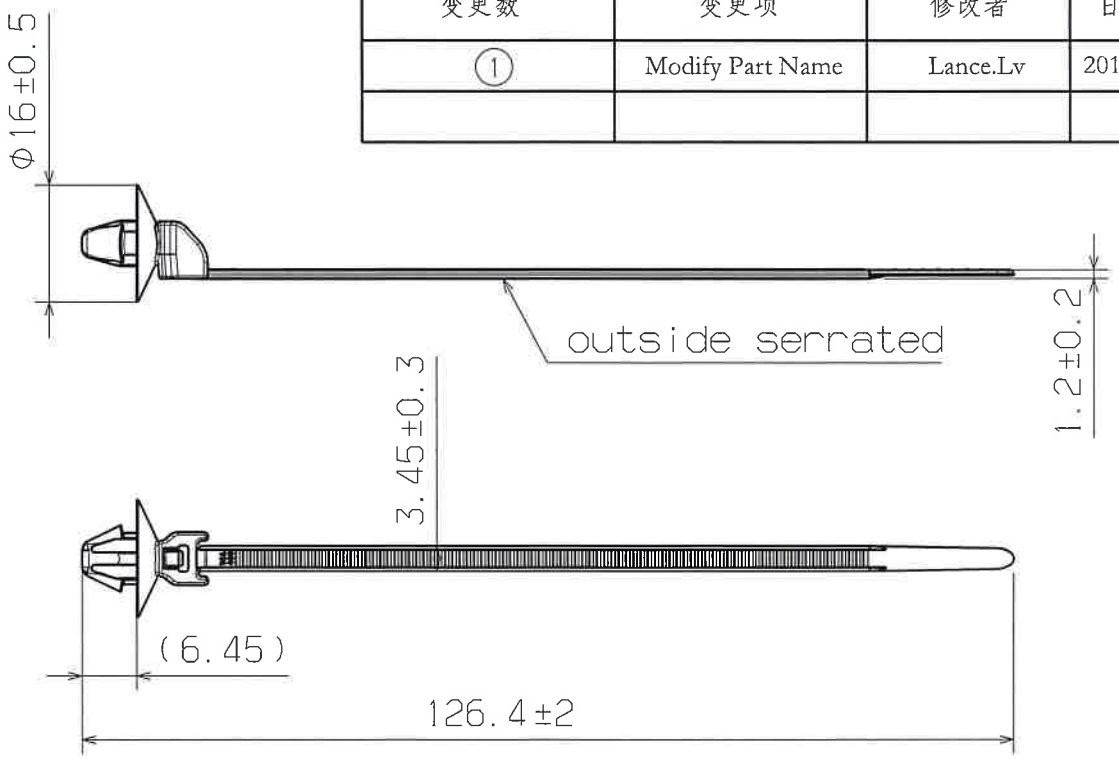

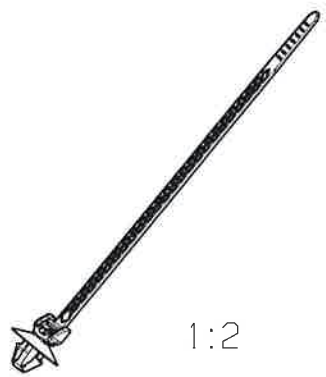

Product type/产品名称	Material/材料	Color/颜色
T30SOS-AS-SFT6.5-E	PA66HSB	BK/黑色
	PA66HSNA	NA浅绿色

Tensile Force/N
环形拉断力
200N

Hole Size
适用孔径
Φ6.5±0.2mm

Bundle Dia
捆绑直径
1-25mm

Panel Thickness
适用板厚
0.8-1.5mm

Material 材料
See table

Dimension Units
尺寸单位mm

PERFORMANCE
性能
SPECIFICATION
标准

CAD

Drawn/制图	Lance.Lv	2016-11-01
Approved/审核	Kevin.Tang	2016-11-02

Scale/比例 1:1

Title/品名

T30SOS-AS-SFT6.5-E ①

Drawing-No/图号

12-0106-001-CSC

Format/格式

A4

The copyright of this drawing is reserved by HellermannTyton.
it is issued on condition that it is not reproduced,copied or disclosed to a third party,either wholly or in part, without the consent of HellermannTyton.

HellermannTyton
海尔曼太通（无锡）电器配件有限公司
(WUXI) Electrical Accessories Co.,Ltd.
Tel:+86-510-5282536
Fax:+86-510-5280112