Revision NO 变更数	Revisions 变更项	Changed 修改者	Date 日期	Approved 确认者	Date 日期

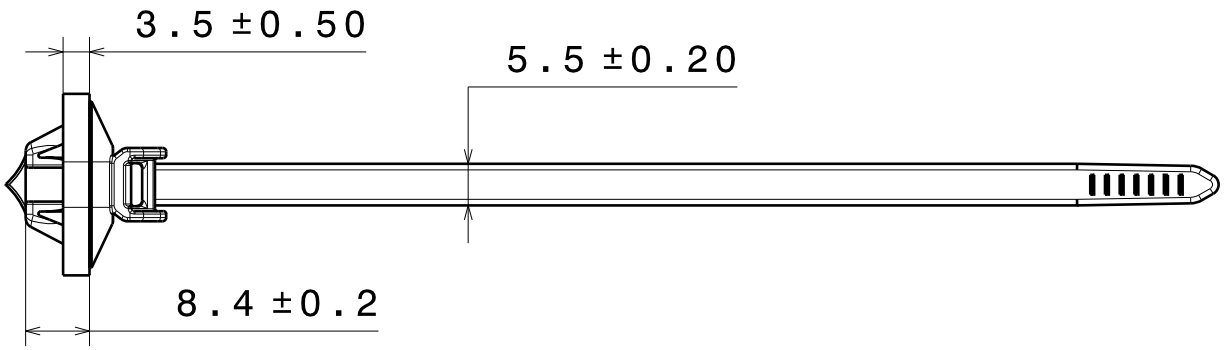

View Without Seal

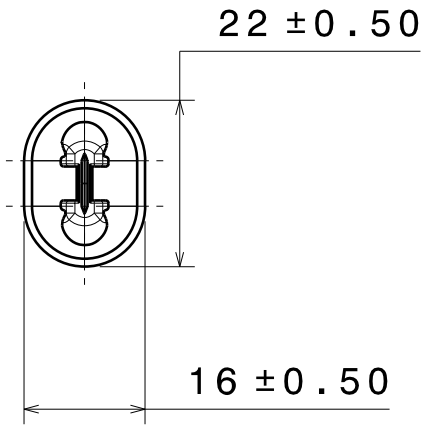

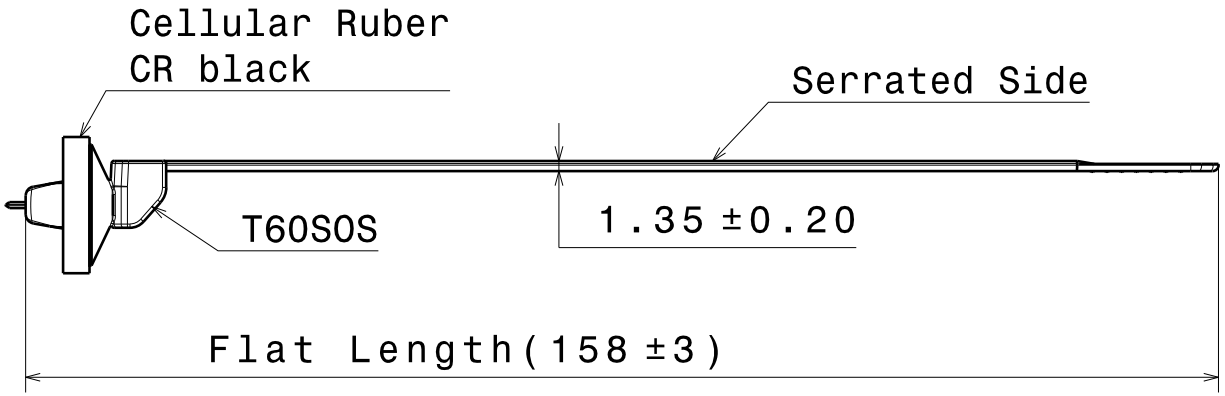

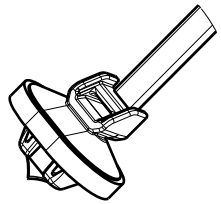

Tensile Strength 环形拉断力	Min. 300 N
Hole Size 适用孔径	6.5±0.25 x 130±0.25
Bundle Dia 捆绑直径	1.6 - 30 mm
Panel Thickness 适用板厚	0.6-2.0
Material 材料	PA66
Dimension Units 尺寸单位mm	
PERFORMANCE 性能 SPECIFICATION 标准	

CATIA V5

Drawn/制图	Brandon Li	2017-11-02	Scale/比例	1:1
Approved/审核	Roger Chang	2017-11-02	Title/品名	T60SOSSFT65x130-E-MS-MD

The copyright of this drawing is reserved by HellermannTyton.
it is issued on condition that it is not reproduced,copied or disclosed to a third party,either wholly or in part, without the consent of HellermannTyton.

HellermannTyton
海尔曼太通（无锡）电器配件有限公司
(WUXI) Electrical Accessories Co.,Ltd.
Tel:+86-510-5282536
Fax:+86-510-5280112

Drawing-No/图号	Format/格式
12-0296-001-CSC	A4