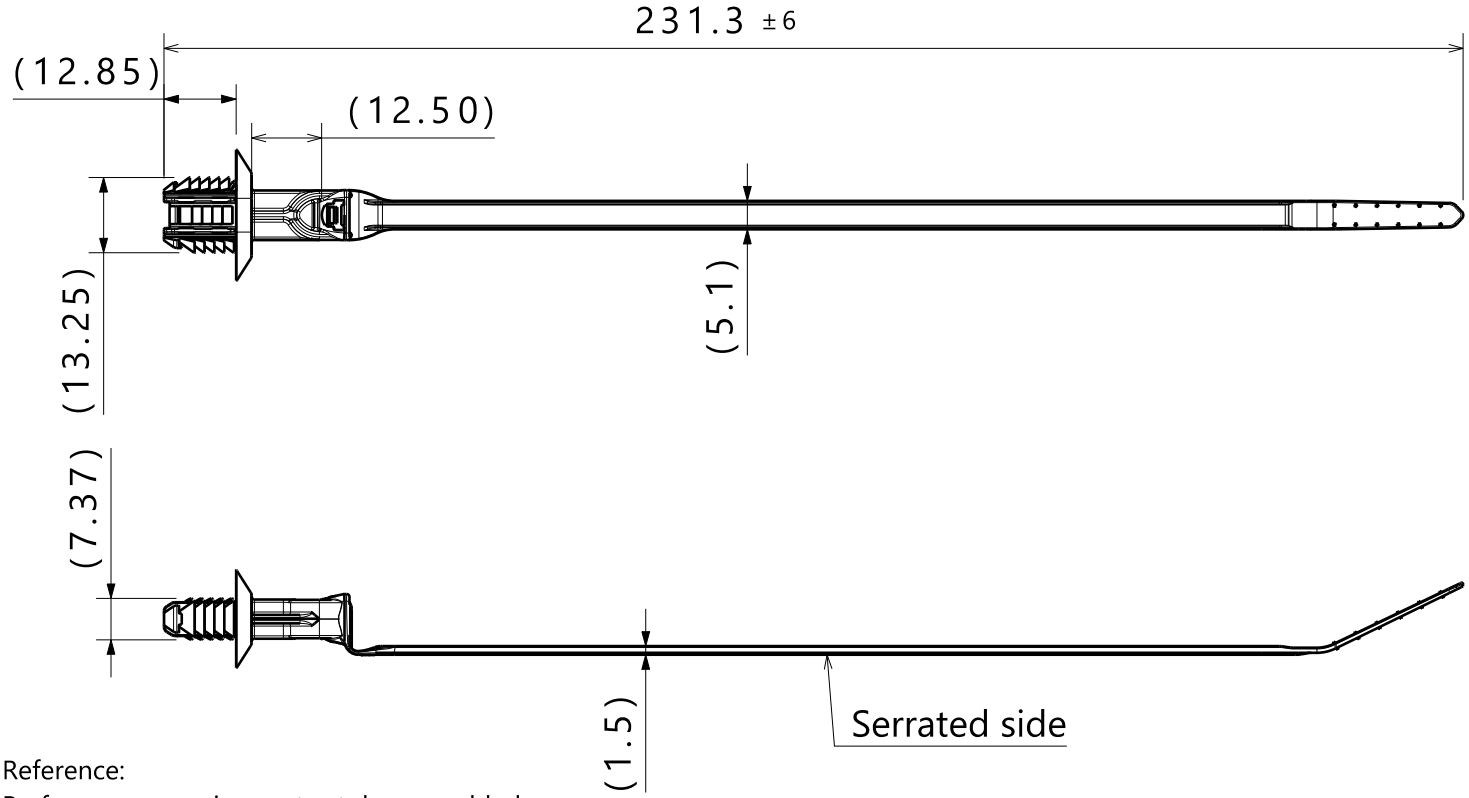


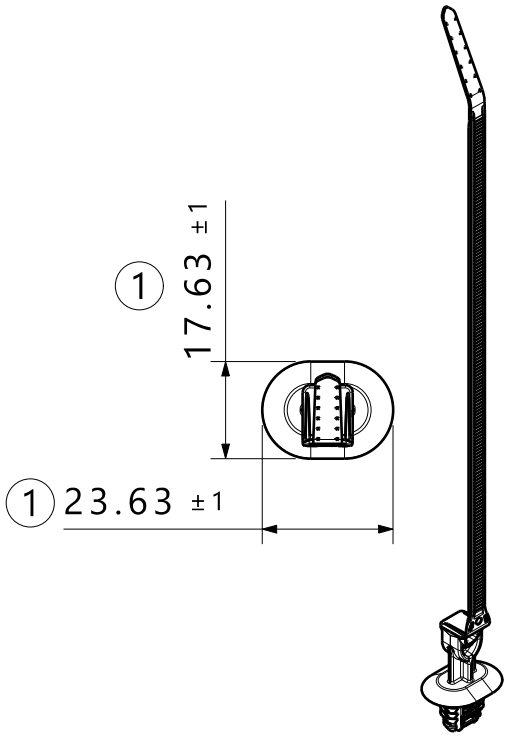


ISOMETRIC VIEW
SCALE 1:2

Reference:
Performance requirements at dry as molded:
1. Fir tree push in force: 45 newtons (10 lbs) max in each applicable nominal oval hole size and a plate thickness of 1.8mm.
2. Fir tree pull out force: 110 newtons (25 lbs) min in each applicable nominal oval hole size and a plate thickness of 1.8mm.
3.Sheet metal thickness range: 0.60mm - 6.75mm
4.Applicable oval hole sizes:
   A. 6.2 x 12.2mm +/-0.2
   B. 6.5 x 12.5mm +0.2/-0.4
   C. 6.5 x 13.0mm +/-0.2
   D. 7.0 x 12.0mm +/-0.2
5.Cable tie min loop tensile strength: 225 newtons (50 lbs)
6.Bundle range: 2.0mm to 50.0mm

| Global Part Description | Material | Color |
|---|---|---|
| T50ROSFTOVAL12.5SO-PA66HIRHSUV-BK | PA66HIRHSUV | Black |

| Revision Level | | | Revision Record |
|---|---|---|---|
| Drawing | State | Part | Change the two dimensions:<br>17.3 to 17.63<br>23.3 to 23.63 |
| 01.1 | Design Release | X | |
| Changed | Date (YYYY/MM/DD) | | |
| Ziv.Zhu | 2023/03/02 | | |
| Approved | Date (YYYY/MM/DD) | | |
| Roger.Chang | 2023/03/02 | | |

All drawing revisions are stored in CAD PDM database

The copyright of this drawing is reserved by HellermannTyton.

| Drawn | Date (YYYY/MM/DD) |
|---|---|
| Ziv.Zhu | 2022/06/27 |
| Approved | Date (YYYY/MM/DD) |
| Roger.Chang | 2022/06/27 |

Units: mm

HellermannTyton
www.HellermannTyton.com

Title: T50ROSFTOVAL12.5SO

Drawing-No: 13-0226-021-CSC

Scale: 3:4
Global Project Number: 13-0226
Format: A4
Sheet: 1 / 1