Revision NO 变更数	Revisions 变更项	Changed 修改者	Date 日期	Approved 确认者	Date 日期

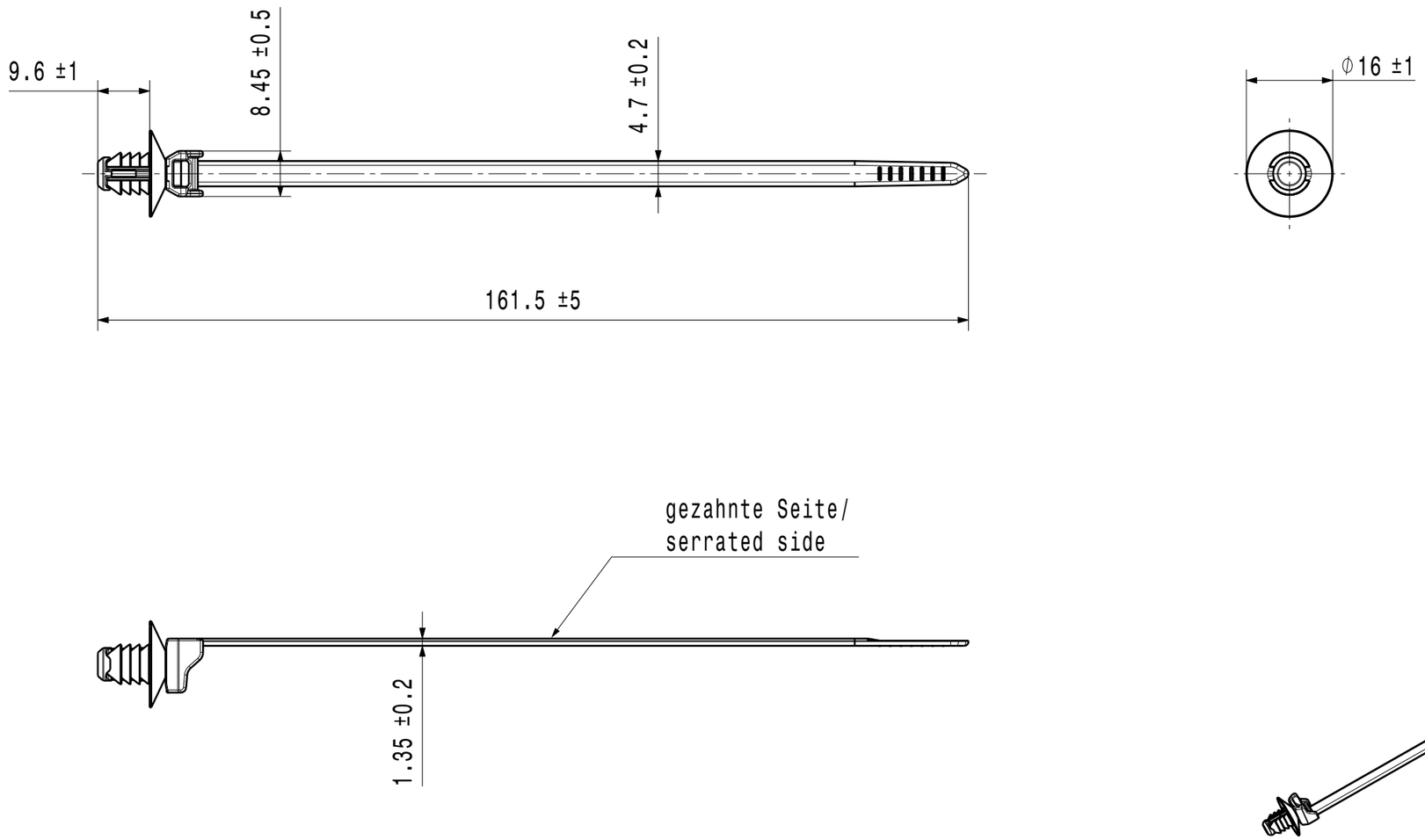

Tensile Force (N)
环形拉断力
150 N

Hole Size
适用孔径
Φ6.1 - Φ6.9 mm

Bundle Dia
捆绑直径
1 - 35 mm

Panel Thickness
适用板厚
0.7 - 3.5 mm

Material/材料:
PA66

Dimension Units/尺寸单位
mm

PERFORMANCE/性能
SPECIFICATION/标准

CATIA V5

Drawn/制图	Brandon Li	2017-07-06
Approved/审核	Roger Chang	2017-07-06

The copyright of this drawing is reserved by HellermannTyton.it is issued on condition that it is not reproduced,copied or disclosed to a third party,either wholly or in part,without the consent of HellermannTyton.

HellermannTyton
海尔曼太通（无锡）电器配件有限公司
(WUXI) Electrical Accessories Co.,Ltd.
Tel:+86-510-5282536
Fax:+86-510-5280112

Scale/比例 NO /无

Title/品名
T50SOSFT6-E3

Drawing-No/图号
14-0904-001-CSC

Format/格式
A3