Revision NO 变更数	Revisions 变更项	Changed 修改者	Date 日期	Approved 确认者	Date 日期
1	Design Update	Brandon Li	2017.02.13	Roger .chang	2017.02.13
2	Design Update	Brandon Li	2017.03.01	Roger .chang	2017.03.01
3	Design Update	Ben lv	2018.10.08	Kevin.T	2018.10.08
4	modifiy material	Ben lv	2018.10.09	Kevin.T	2018.10.09
5	Design Update	Ben lv	2018.10.29	Kevin.T	2018.10.29

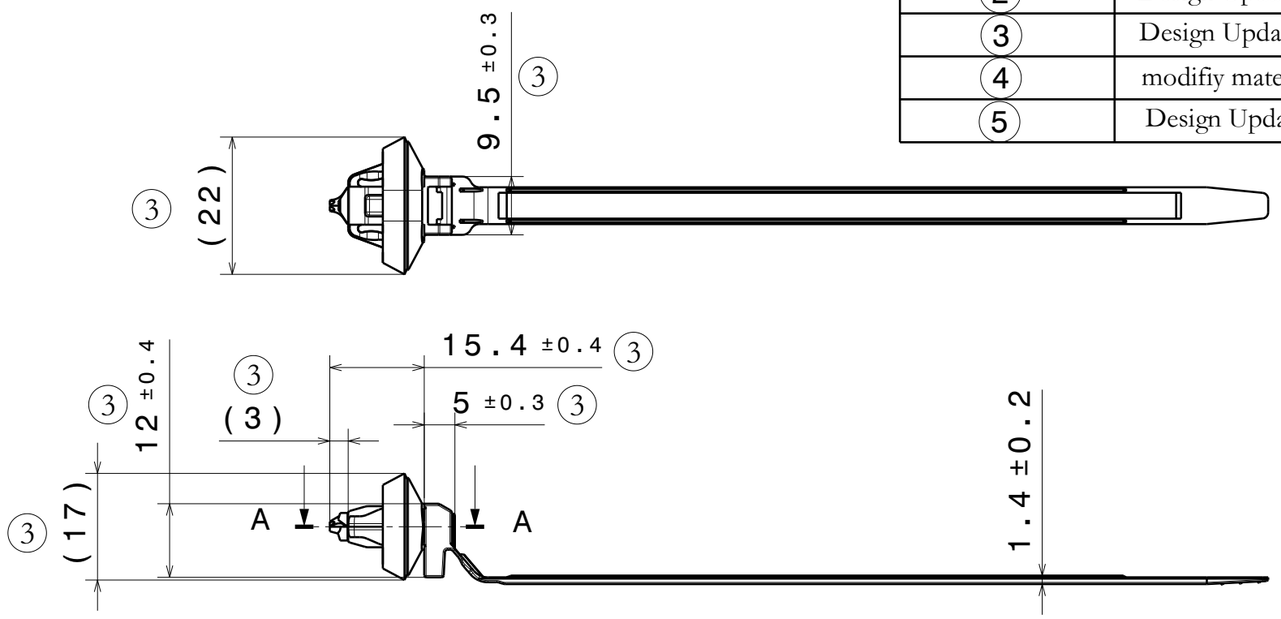

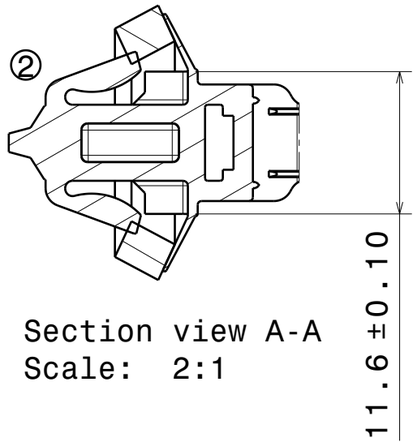

Section view A-A
Scale: 2:1

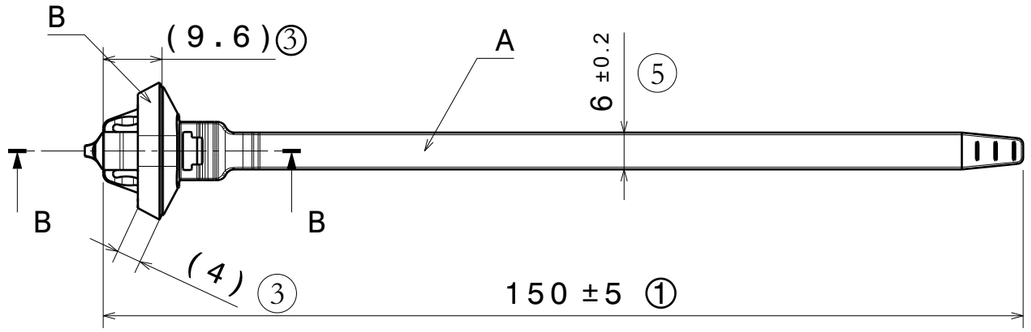

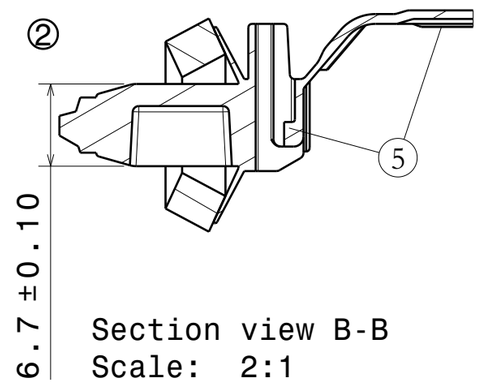

Section view B-B
Scale: 2:1

技术要求/Note:

1. 装配完成后，在机器上将部件B焊接在部件A
   After assembly, part B is laser-welded by machine to part A
2. 激光焊接前，部件A必须保持干燥
   For the laser-welding process , part A must be dessicated(do not add any water)
3. ① 未注公差参考下表
   Unless otherwise specified general tolerance will be

尺寸范围	≤1	>1-5	>5-10	>10-20	>20	角度
公差	±0.1	±0.15	±0.3	±0.4	±0.7	±2.5°

Hole Size
适用孔径
7x12±0.2mm
Rmax=2.0

Bundle Dia
捆绑直径
Φ1.6-25mm

Panel Thickness
适用板厚
0.5-1.2mm

Material/材料:
See Table

Dimension Units/尺寸单位
mm

PERFORMANCE/性能
SPECIFICATION/标准

符号/ No.	品名/ Product Name	图号/ Drawing-No	材质/ Material	数量/ Qty	颜色/ Color	备注/ Note
A	OS150-PM712S	15-0472-002	PA66	1	自然色/ Natural	防水扎带/ Water Proof Tie
B	Rubber seal 70×120×40	15-0472-003	EPDM ④	1	黑色/ Black	防水海绵/ Cellular Rabber Seal

CATIA V5

Drawn/制图	Brandon Li	2017-01-22
Approved/审核	Roger Chang	2017-01-23

Scale/比例 NO /无

Title/品名
OS150-PM712S-WPJ

The copyright of this drawing is reserved by HellermannTyton.it is issued on condition that it is not reproduced,copied or disclosed to a third party,either wholly or in part,without the consent of HellermannTyton.

HellermannTyton
海尔曼太通（无锡）电器配件有限公司
(WUXI) Electrical Accessories Co.,Ltd.
Tel:+86-510-5282536
Fax:+86-510-5280112

Drawing-No/图号
15-0472-001-CSC

Format/格式
A3