Revision Level		Revision Record	Changed	Date	Approval	Date
Part	Drawing					
	1	Add slot size and Dimension tolerances.	SIMON NG	30-June-15	Edward Tan	30-June-15
	2	Added HT Global project Number.	SIMON NG	21-May-18	Edward Tan	21-May-18

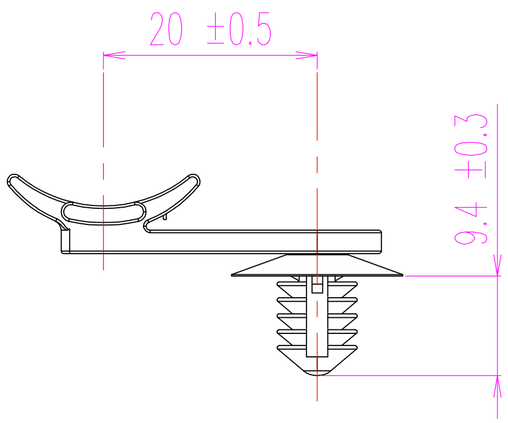

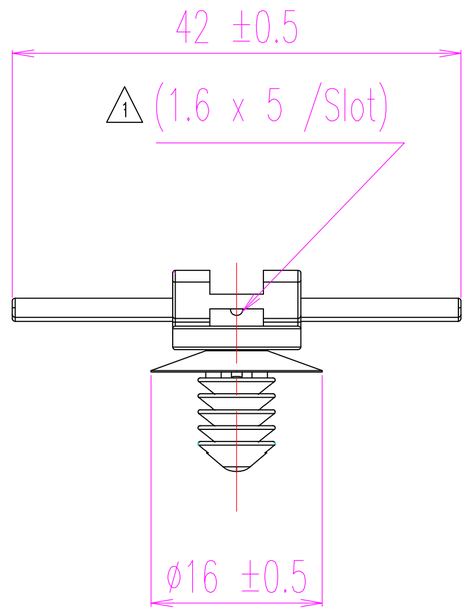

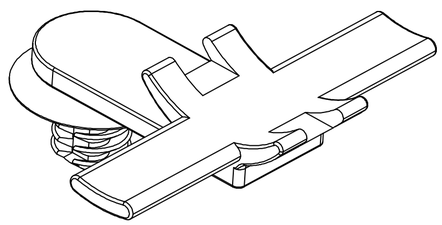

Hole Size :

ø6.3 ~ ø7mm

.

Panel Thickness :

0.8 ~ 4.5mm

.

Material

P.A. 66

.

Tolerances

PERFORMANCE SPECIFICATION

ACAD

The copyright of this drawing is reserved by HELLERMANNTYTON.
It is issued on condition that it is not reproduced, copied or disclosed to a third party, either wholly or in part, without the consent of HELLERMANNTYTON.

Drawn	Simon Ng	26 Aug 2014
Approved.	EDWARD TAN	26 Aug 2014

HellermannTyton
545, Yishun Industrial Park A
Yishun Avenue 7
Singapore 768741
Tel: (+65) 6852 8585
Fax: (+65) 6756 6798

Scale: 1 : 1.25

Reference: 14.1516

Title

COW20DP7

Uncontrolled Document

Drawing-No [SG14064-02]

15-0542-001-CSH 2

Format A4

Sheet 1 of 1