CATIA V5

Revision Level			Revision Record	Changed	Date	Approved	Date
Drawing	State	Part					
01.1	Design Release	-	SEE ECN# 014539	CTF	07/27/2018	TAT	07/27/2018

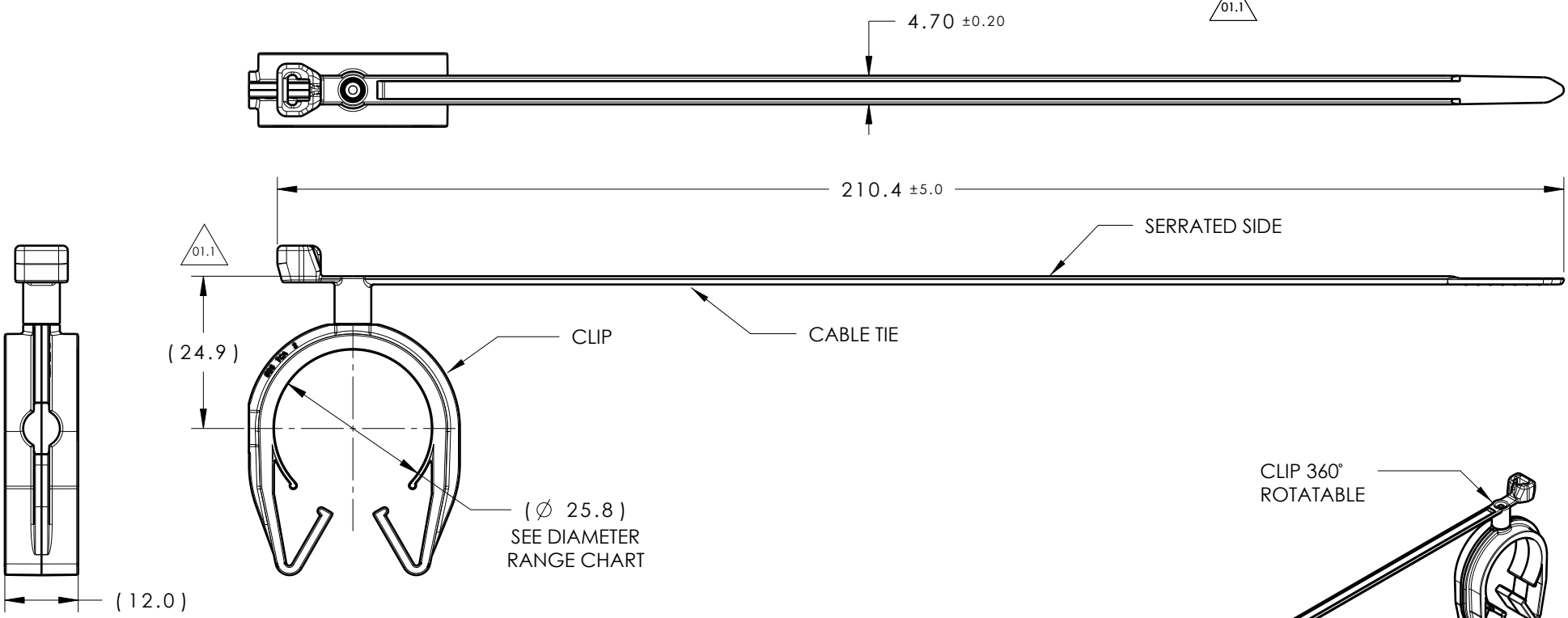

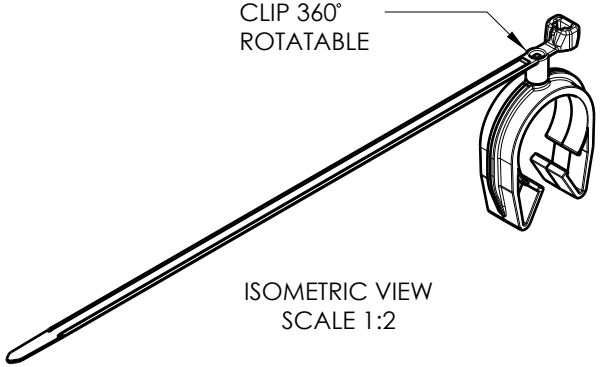

TYPE	SUGGESTED DIAMETER RANGE*
HARNESS	23.0MM - 28.5MM
HOSE	23.0MM - 28.5MM
HARD PIPE/TUBE	25.9MM - 29.0MM

*RECOMMENDED SIZES MAY DIFFER DEPENDING ON THE APPLICATION , PRODUCT REQUIREMENTS AND MATERIALS USED

**PATENT PENDING 29/582,271

01.1 01.1

GLOBAL PART DESCRIPTION 01.1	BUNDLE RANGE	CABLE TIE			CLIP**		
		DRAWING	MATERIAL	COLOR	DRAWING	MATERIAL	COLOR
T50SMVCMOC26M180-PA66HIRHSUV-BK	2 TO 50	14-0606-012-CSU	PA66HIRHSUV	BLACK	16-0325-000-CSU	PA66HIRHSUV	BLACK

Material SEE CHART COLOR: SEE CHART	Units **millimeters** Tolerance defined on each dimension	The copyright of this drawing is reserved by HellermannTyton. It is issued on condition that it is not reproduced, copied or disclosed to a third party, either wholly or in part, without the consent of HellermannTyton.	Drawn TAT 2/26/18 Approved EJH 2/27/18 HellermannTyton North America Email: corp@htamericas.com Web: www.hellermann.tyton.com	Article/Type-No T50SMVCMOC26M180 Title 01.1 T50SMVC CABLE TIE COUPLED TO 26MM MOC Drawing-No PRODUCTION : Phase 16-0325-306-CSU	Scale 1:1 Project Number 16-0325 Format AH Sheet 1/1