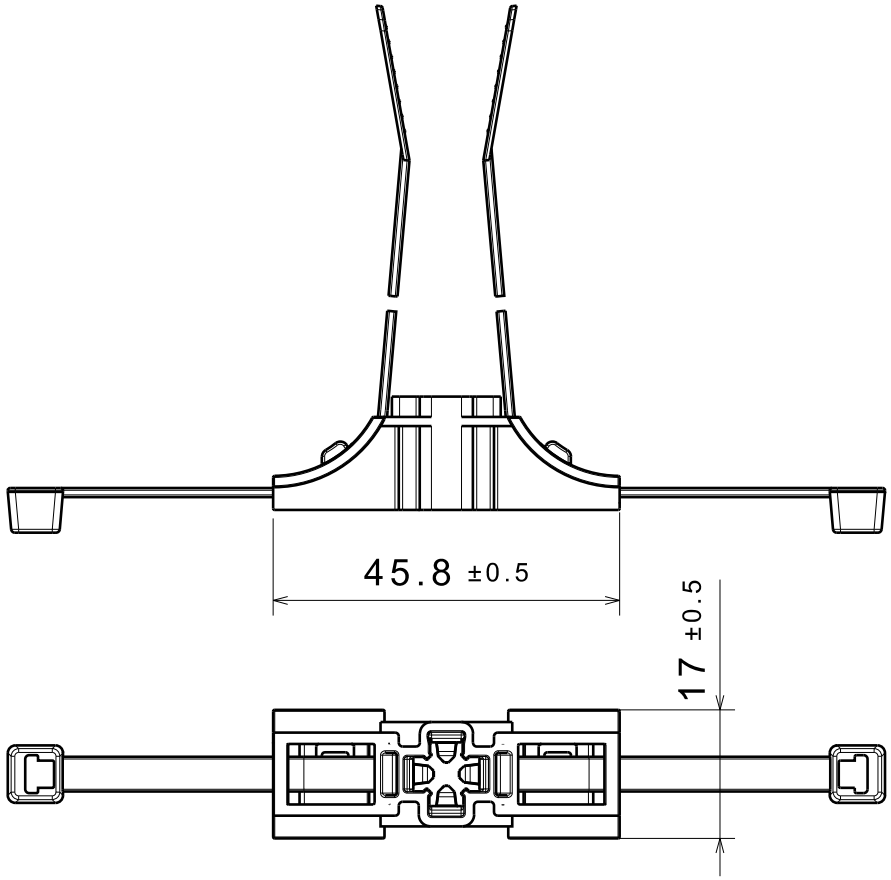

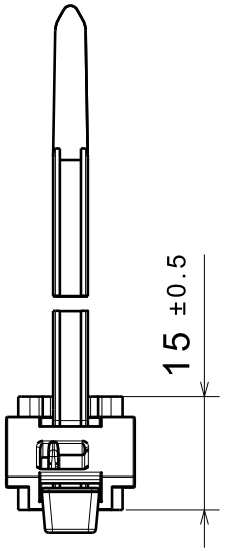

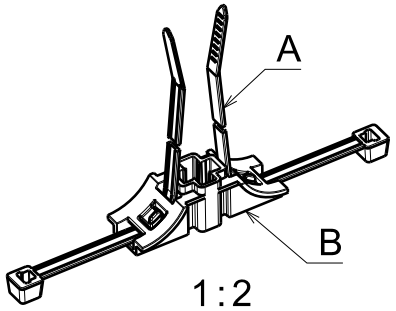

Product Name 品名	Material 材料	Length 长度(L)	Width 宽度(W)	Thickness 厚度(S)	Bundle Daimeter 捆绑直径	Stud Size 适用螺柱	Tensile 拉断力
T120RDSBS5-6	A: PA66HS B: PA66HIRHS	380±10mm	7.6±0.3mm	1.9±0.2mm	5-105mm	T5/M5/M6	535N

Revision Level			Revision Record
Drawing	State	Part	XXXX
00.0	Design Release	X	
Changed	Date (YYYY/MM/DD)		
XXXX	XXXX		
Approved	Date (YYYY/MM/DD)		
XXXX	XXXX		

All drawing revisions are stored in CAD PDM database

The copyright of this drawing is reserved by HellermannTyton.

Drawn	Date (YYYY/MM/DD)
Robert.Zhu	2020-06-28
Approved	Date (YYYY/MM/DD)
Kevin.Tang	2020-06-28

Units: mm

HellermannTyton
www.hellermanntyton.com

Title: T120RDSBS5-6

Drawing-No: 16-0477-001-CSC

Scale: 1:1/1:2

Global Project Number: 16-0477

Format: A4

Sheet: 1/1