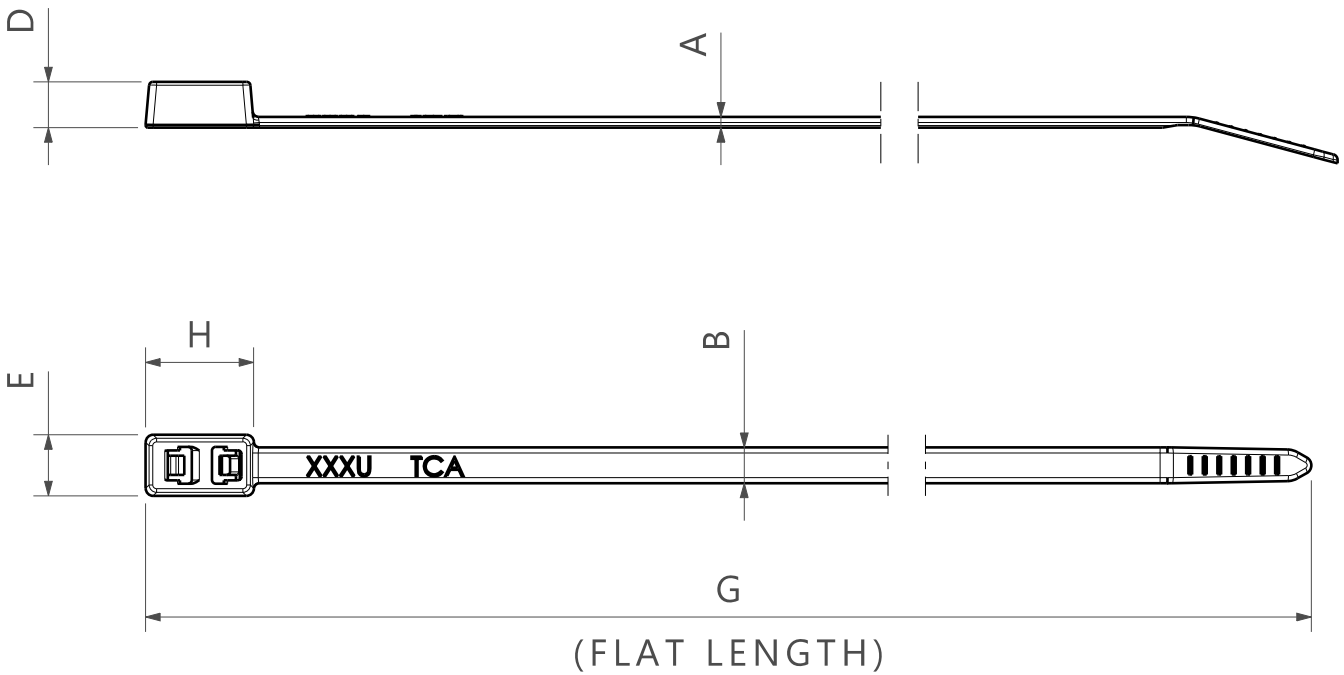

PRODUCT CODE DESCRIPTION

T50IDH_UV

└ COLOR

(CONSULT FACTORY FOR AVAILABLE COLORS)

Product Code	Cable Range (mm)		Material	A	B	D	E	G	H	Min Loop Tensile Strength (N)		Operating temperature
	1 Loop	2 Loops								1st Loop	2nd Loop	
T50IDH	1.6 to 76.2	1.6 to 38.1	PA66HIRHS	1.4±0.2	4.7±0.2	6.0±0.5	8.0±0.5	305.0±10.0	13.7±0.9	225	180	-40°~+105°
			PA66W									-40°~+85°
			PA66HSB									-40°~+105°
			1 3									2

Revision Level			Revision Record
Drawing	State	Part	Add Material: PA66HSB
03.1	Design Release		
Changed	Date (YYYY/MM/DD)		
Ziv.Zhu	2023/01/13		
Approved	Date (YYYY/MM/DD)		
Roger.Chang	2023/01/13		

All drawing revisions are stored in CAD PDM database

The copyright of this drawing is reserved by HellermannTyton.

Drawn	Date (YYYY/MM/DD)
Ziv.Zhu	2021/10/28
Approved	Date (YYYY/MM/DD)
Roger.Chang	2021/10/28

Units: mm

HellermannTyton
www.HellermannTyton.com

Title: T50IDH

Drawing-No: 17-0016-001-CSC

Scale: 1:1

Global Project Number: 17-0016

Format: A4

Sheet: 1 / 1