| Revision No. 变更数 | Revisions 变更事项 | Changed 修改者 | Date 日期 | Approved 确认者 | Date 日期 |
|---|---|---|---|---|---|
| | | | | | |
| | | | | | |

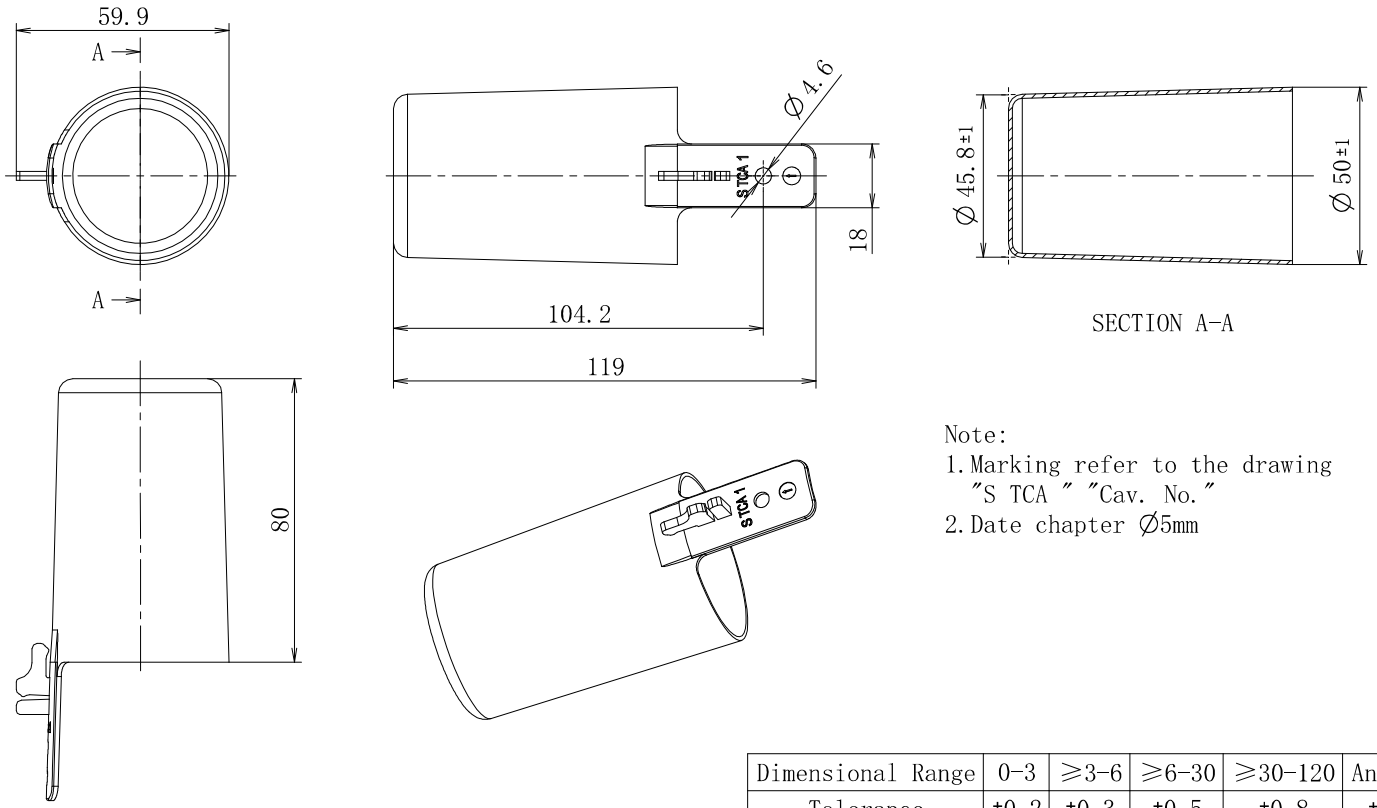


Note:
1. Marking refer to the drawing "S TCA " "Cav. No."
2. Date chapter Ø5mm

| Dimensional Range | 0-3 | ≥3-6 | ≥6-30 | ≥30-120 | Angel |
|---|---|---|---|---|---|
| Tolerance | ±0.2 | ±0.3 | ±0.5 | ±0.8 | ±2° |

| | | | | | |
|---|---|---|---|---|---|
| Material/材料 PP | NX 10.0 | Drawn/制图 | Josh.Liu | 2017-07-11 | Scale/比例 1:1 |
| | | Approved/审核 | Roger.C | 2017-07-17 | Title/品名 Cap-D50H80T1 |
| Demension Units/单位 MM | The copyright of this drawing is reserved by HELLERMANNTYTON. it is issued on condition that it is not reproduced, copied or disclosed to a third party, either wholly or in part, without the consent of HELLERMANNTYTON. | HellermannTyton 海尔曼太通（无锡）电器配件有限公司 (WUXI) Electrical Accessories Co., Ltd. Tel:+86-510-85282536 Fax:+86-510-85280112 | | | Drawing-No./图号 17-0056-002-CSC |
| PERFORMANCE/性能 SPECIFICATION/标准 | | | | | Format 格式 A4 |
| | | | | | Page 页数 1/1 |