Revision NO 变更数	Revisions 变更项	Changed 修改者	Date 日期	Approved 确认者	Date 日期

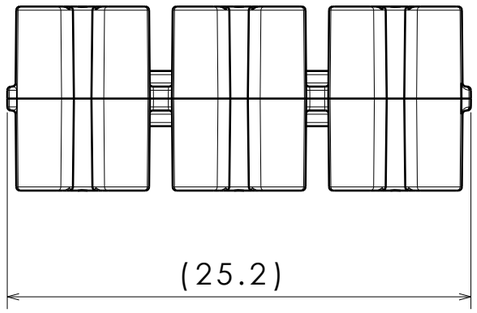

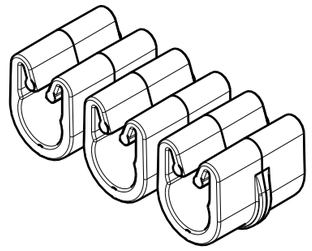

ISOMETRIC VIEW
SCALE 2:1

CAVITY ID NUMBER
AND 'TCA'
TO BE LOCATED ON
THIS SURFACE

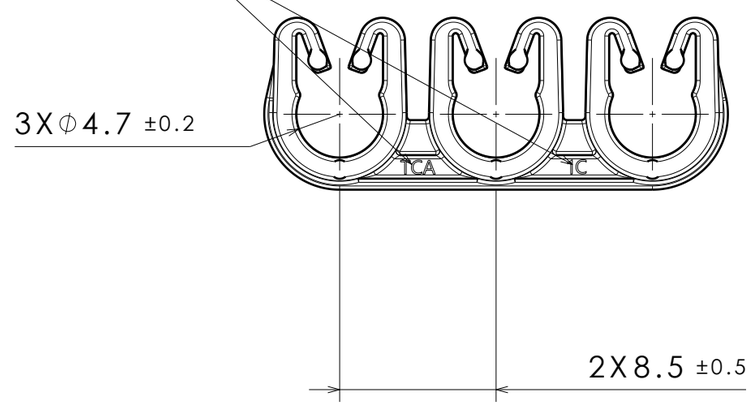

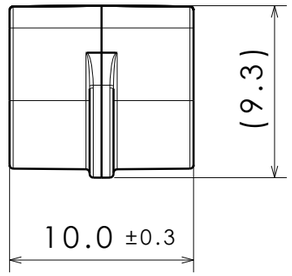

REFERENCE:

PERFORMANCE REQUIREMENTS AT DRY AS MOLDED:
1. CLIP PUSH ON FORCE: 90 NEWTONS (20 LBS) MAX USING NOMINAL PIN SIZE OF 4.7MM

NOTES:

1. MAXIMUM PERCENT REGRIND PERMISSIBLE: 25%
2. MAX ALLOWABLE FLASH OR MISMATCH TO BE 0.3MM

Material/材料:
PA66HIRHS-BK

Dimension Units/尺寸单位
mm

PERFORMANCE/性能
SPECIFICATION/标准

CATIA V5

Drawn/制图	Yancey.Yu	2019-11-15
Approved/审核	Kevin.Tang	2019-11-15

Scale/比例 NO /无

Title/品名
PC5X3

The copyright of this drawing is reserved by HellermannTyton.it is issued on condition that it is not reproduced,copied or disclosed to a third party,either wholly or in part,without the consent of HellermannTyton.

HellermannTyton
海尔曼太通（无锡）电器配件有限公司
(WUXI) Electrical Accessories Co.,Ltd.
Tel:+86-510-5282536
Fax:+86-510-5280112

Drawing-No/图号
17-0129-001-CSC

Format/格式
A3