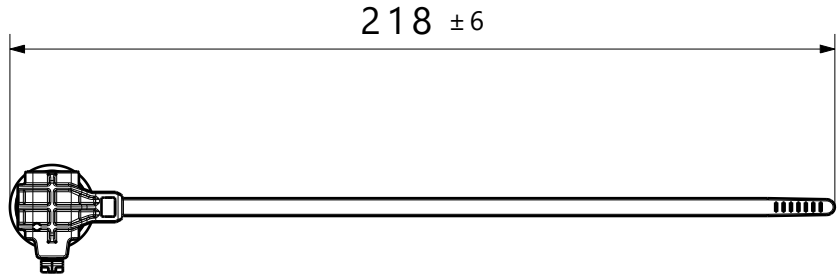

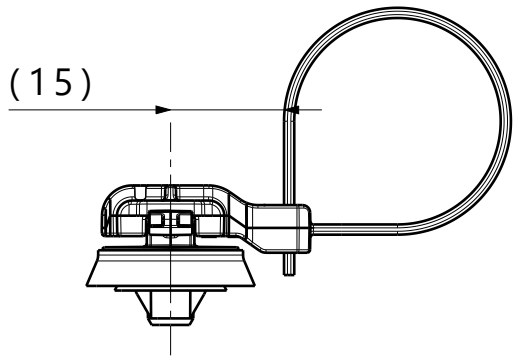

Assembled View
Scale 1:1

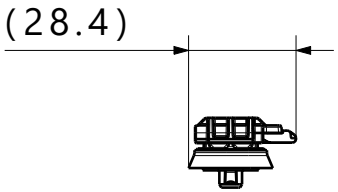

Global Part Description	Bundle Range	Panel Thickness	Cable Ties			Mount		
			Drawing	Material	Color	Drawing	Material	Color
T50ROS15ACCSRAH1.4T-PA66HIRHSUV/TPE-BK/GY	2-50mm	1.2-1.8mm	17-0148-001	PA66HIRHSUV	Black	16-0348-051	PA66HIRHSUV/TPE	Grey/Black

Revision Level			Revision Record
Drawing	State	Part	
00.0	Design Release		
Changed	Date (YYYY/MM/DD)		
Approved	Date (YYYY/MM/DD)		

All drawing revisions are stored in CAD PDM database

The copyright of this drawing is reserved by HellermannTyton.

Drawn	Date (YYYY/MM/DD)
Yancey.Yu	2021/05/26
Approved	Date (YYYY/MM/DD)
Kevin.Tang	2021/05/26

Units: mm

HellermannTyton
www.HellermannTyton.com

Title: T50ROS15ACCSRAH1.4T

Drawing-No: 17-0148-131-CSC

Scale: 1:2
Global Project Number: 17-0148
Format: A4
Sheet: 1 / 1