SW2015

Revision level			Revision Record	Changed	Date	Approved	Date
Drawing	State	Part					
01.1	**Design Release**		SEE ECN# 013740	CAS	2/21/2018	KAC	2/21/2018

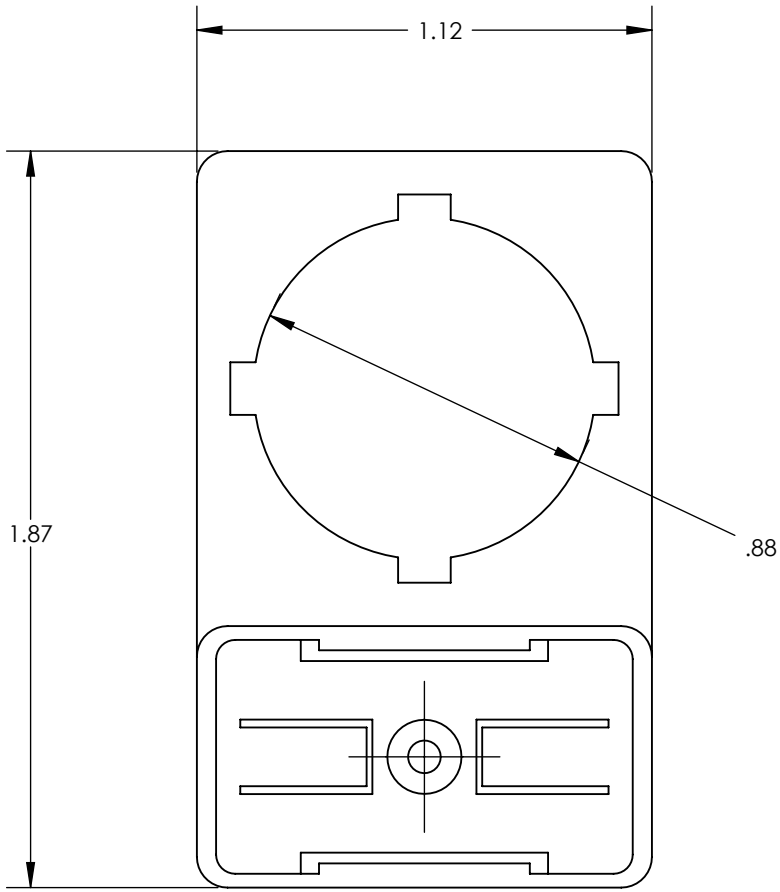

PTSA-22

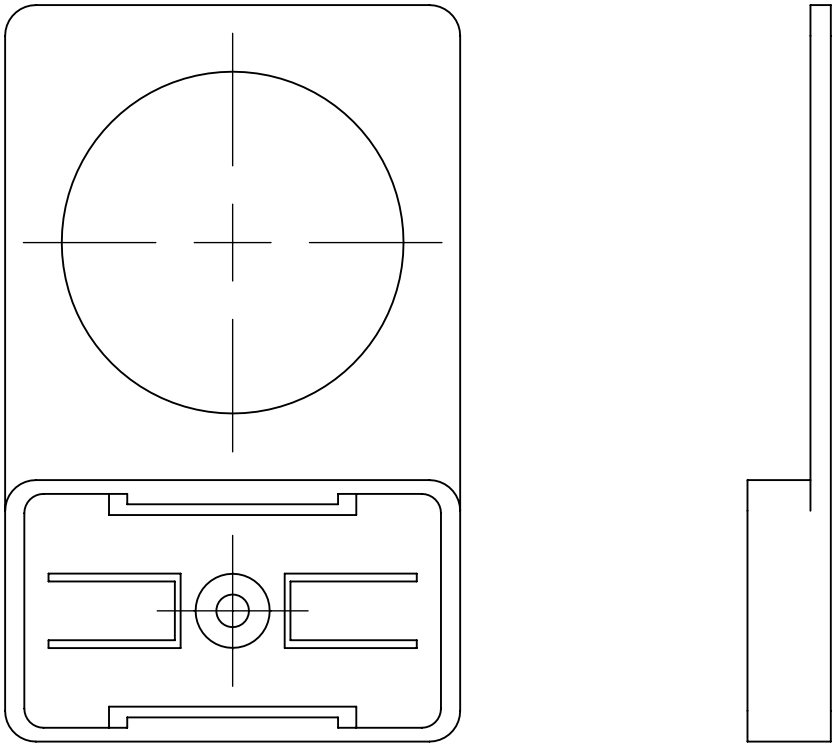

PTOA-22

NOTES:
1. ADHESIVE: ACRYLIC
2. ADHESIVE OPERATING TEMPERATURE -22° F TO +266° F (-30° C TO +130° C)
3. ROHS COMPLIANT
4. FLAMMABILITY: UL94 V0

01.1

GLOBAL PART NAME	PART NUMBER	TYPE	LOCATORS	COLOR	QUANTITY
PTSA-22-PC-BK	596-00189	PTSA-22	YES	BLACK	100
PTOA-22-PC-BK	596-00190	PTOA-22	NO		

Material
POLYCARBONATE

Units: **inches**
Dimension without tolerances details to:
.XXXX = ±.0005
.XXX = ±.005
.XX = ±.01
.X = ±.03
None = ±.06
∠ = ±0.5°
Dimension Formatted in/[mm]

The copyright of this drawing is reserved by HellermannTyton. It is issued on condition that it is not reproduced, copied, or disclosed to a third party, either wholly or in part, without the consent of HellermannTyton.

Drawn	GRW	3/2/2017
Approved	KAC	3/2/2017

HellermannTyton
North America
Email: corp@htamericas.com
Web: www.hellermann.tyton.com

Article/Type-No: PTSA-22 & PTOA-22

Title: **PLASTIC BUTTON NAMELPLATE BASE**

Drawing-No: **17-0707-001-CSU**

PRODUCTION : Phase

Scale

Project Number: PRP 17-0707

Format: AH

Sheet: 1/1