Revision No. 变更数	Revisions 变更事项	Changed 修改者	Date 日期	Approved 确认者	Date 日期

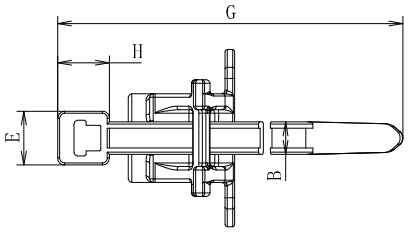

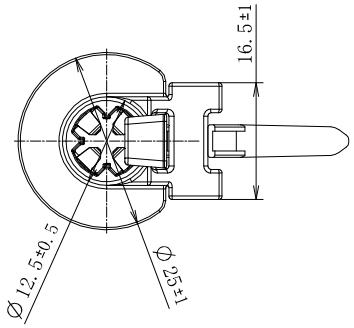

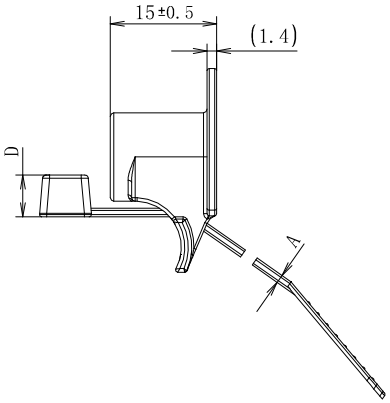

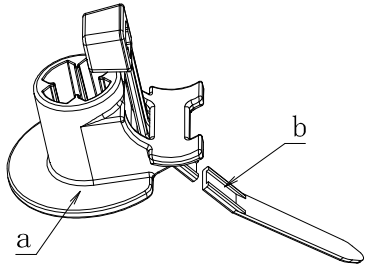

Dimensional Range	0-3	≥3-6	≥6-30	≥30-120	Angle
Tolerance	±0.2	±0.3	±0.5	±0.8	±3°

b Product code b 型号	Continuos Operation Temprature/适用温度范围	Flame Rating	A	B	D	E	G	H
T50R-HSB	-40℃~+105℃	UL94 V2	1.2±0.2	4.6±0.3	5.9±0.6	7.6±1.0	202.0±6.0	7.3±0.7

Min. Loop Tensile Strength/
最小环形拉断力
225N

Bundle Size/
捆绑直径
∅4.0 to ∅50.0

Suitable for weld screw适配螺栓
M5/M6

Material/材料
a:PA66 HIRHSB
b:PA66 HSB

Demension Units/
单位 MM

PERFORMANCE/性能
SPECIFICATION/标准

NX 10.0

Drawn/制图	Josh.Liu	2017-06-21	Scale/比例 1:1
Approved/审核	Roger.C	2017-07-10	

The copyright of this drawing is reserved by HELLERMANNTYTON.
it is issued on condition that it is not reproduced,copied or disclosed to a third party,either wholly or in part,without the consent of HELLERMANNTYTON.

HellermannTyton
海尔曼太通（无锡）电器配件有限公司
(WUXI) Electrical Accessories Co.,Ltd.
Tel:+86-510-85282536
Fax:+86-510-85280112

Title/品名
T50RSBHM5-6

Drawing-No./图号
17-1344-001-CSC

Format 格式 A4

Page 页数 1/1