Revision No. 变更数	Revisions 变更事项	Changed 修改者	Date 日期	Approved 确认者	Date 日期

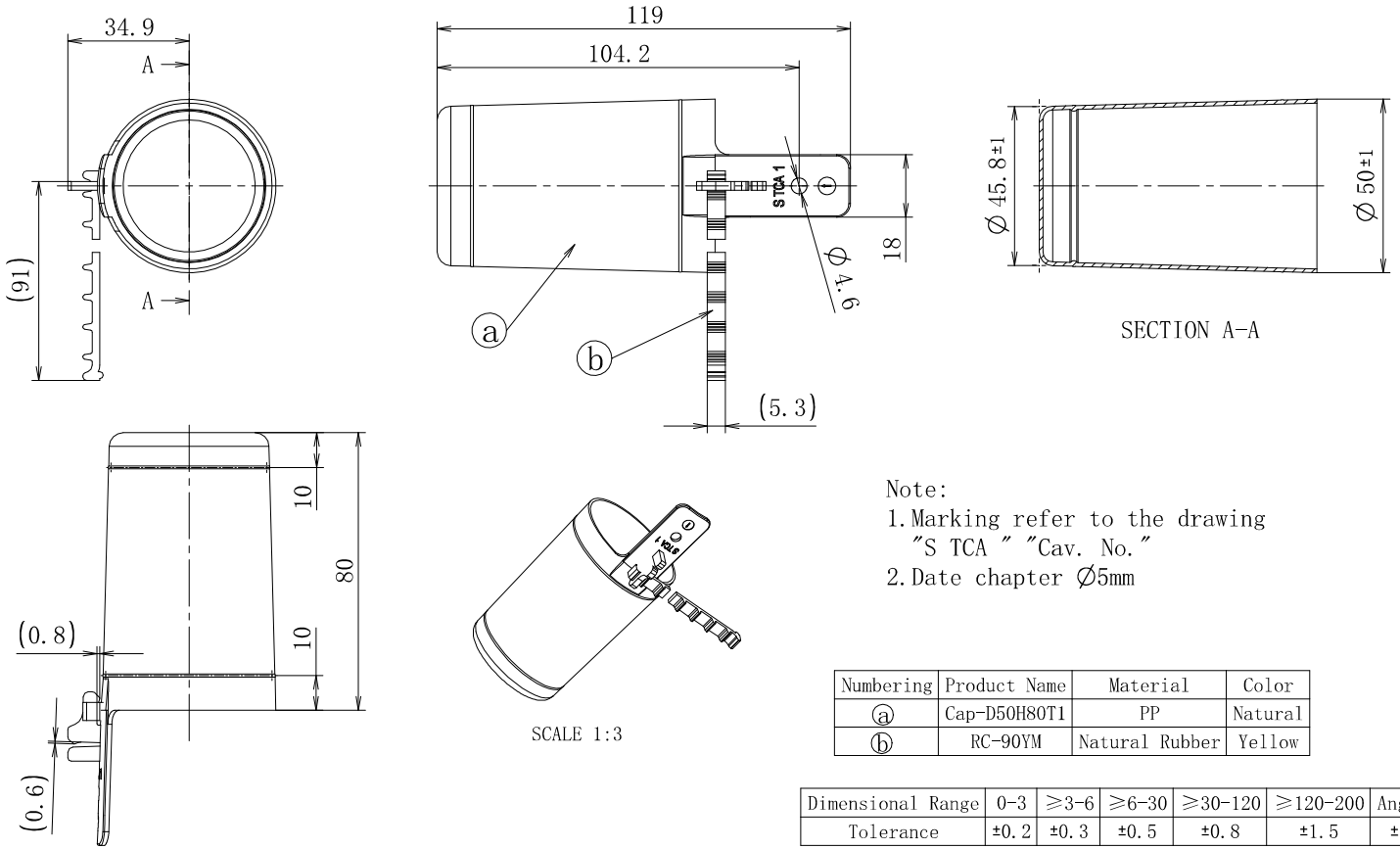

Note:
1. Marking refer to the drawing "S TCA " "Cav. No."
2. Date chapter Ø5mm

Numbering	Product Name	Material	Color
ⓐ	Cap-D50H80T1	PP	Natural
ⓑ	RC-90YM	Natural Rubber	Yellow

Dimensional Range	0-3	≥3-6	≥6-30	≥30-120	≥120-200	Angel
Tolerance	±0.2	±0.3	±0.5	±0.8	±1.5	±3°

NX 10.0

Drawn/制图	Josh.Liu	2017-11-13	Scale/比例 1:2
Approved/审核	Roger.C	2017-11-13	

Demension Units/ 单位 MM

PERFORMANCE/性能 SPECIFICATION/标准

The copyright of this drawing is reserved by HELLERMANNTYTON. it is issued on condition that it is not reproduced, copied or disclosed to a third party, either wholly or in part, without the consent of HELLERMANNTYTON.

HellermannTyton
海尔曼太通（无锡）电器配件有限公司
(WUXI) Electrical Accessories Co.,Ltd.
Tel:+86-510-85282536
Fax:+86-510-85280112

Title/品名
Cap-D50H80T1-MOD-90YM

Drawing-No./图号
17-2534-001-CSC

Format 格式 A4

Page 页数 1/1