Revision NO 变更数	Revisions 变更项	Changed 修改者	Date 日期	Approved 确认者	Date 日期
1	modify hole dimension	Ben lv	2019-03-05	Kevin T	2019-03-05

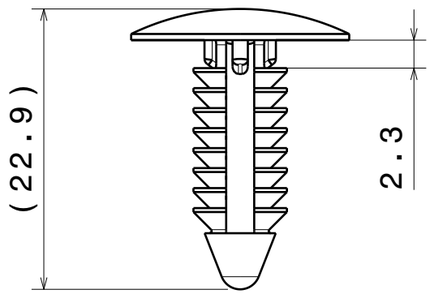

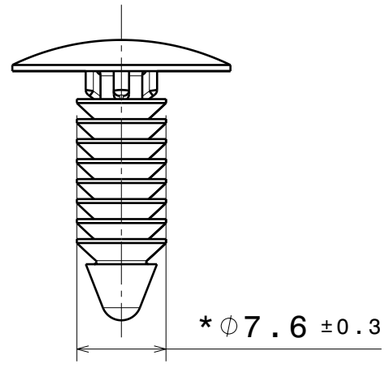

General Dimensional Tolerance	
>0-3	±0.2
>3-6	±0.29
>6-10	±0.35
>10-18	±0.42
>18-30	±0.5
>30-50	±0.6
>50-80	±0.9
>80-120	±1.25
>120-180	±1.45
>180-250	±1.6
>250-315	±1.8
>315-400	±2.6
>400-500	±3.5
>500-630	±4
>630-800	±4.5
>800-1000	±5
ANGLE	±1°
ECCENTICIY	Φ0.15

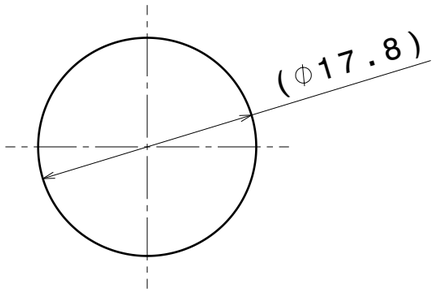

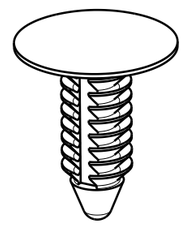

Hole Size
适用孔径 1
Φ6.5~ 6.9mm

Panel Thickness
适用板厚
2-10 mm

Material/材料:
PA66

Dimension Units/尺寸单位
mm

PERFORMANCE/性能
SPECIFICATION/标准

CATIA V5

Drawn/制图	Brandon Li	2018-03-21
Approved/审核	Kevin Tang	2018-03-21

Scale/比例 NO /无

Title/品名
PLUGFT6.5LG

The copyright of this drawing is reserved by HellermannTyton.it is issued on condition that it is not reproduced,copied or disclosed to a third party,either wholly or in part,without the consent of HellermannTyton.

HellermannTyton
海尔曼太通（无锡）电器配件有限公司
(WUXI) Electrical Accessories Co.,Ltd.
Tel:+86-510-5282536
Fax:+86-510-5280112

Drawing-No/图号
17-2703-001-CSC

Format/格式
A3