Revision NO 变更数	Revisions 变更项	Changed 修改者	Date 日期	Approved 确认者	Date 日期

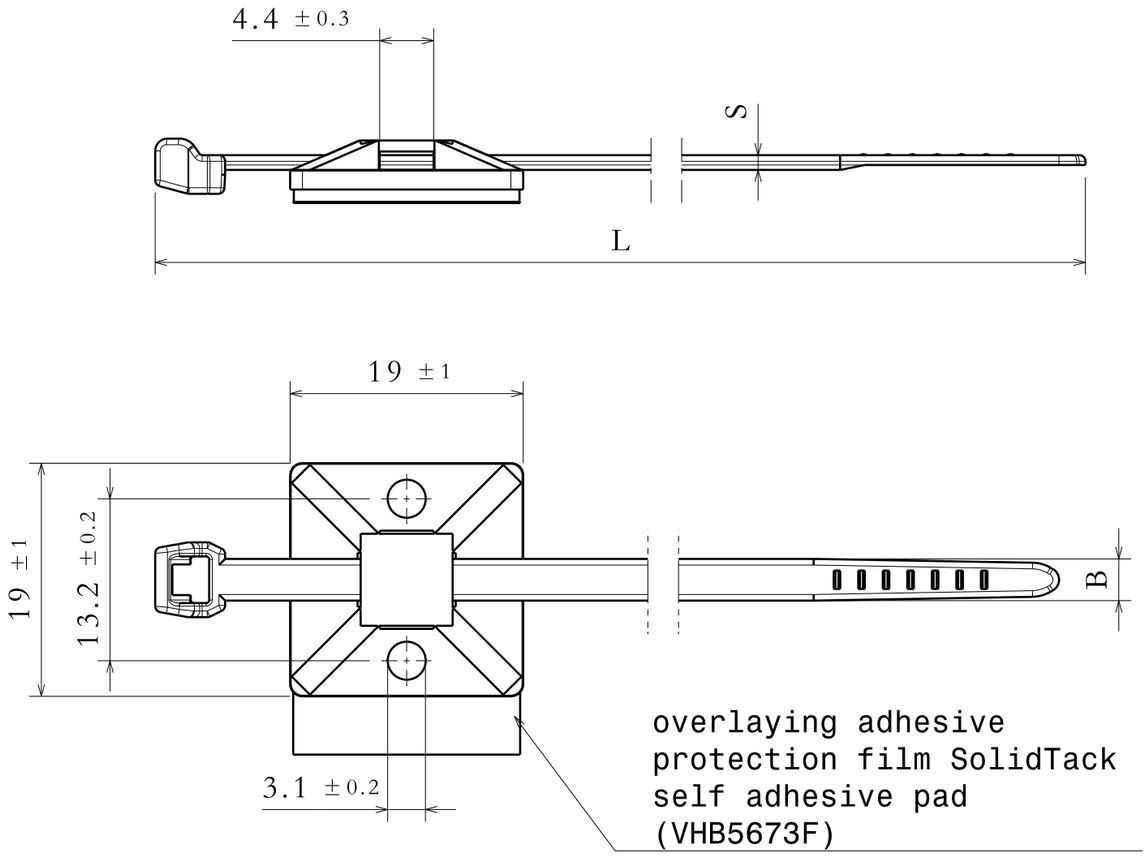

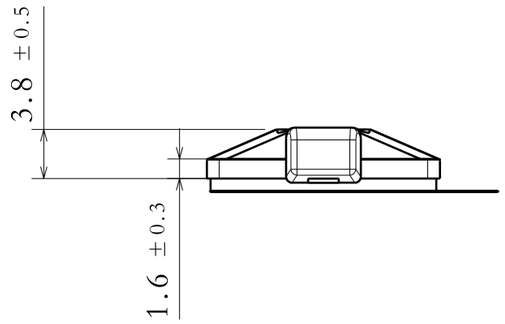

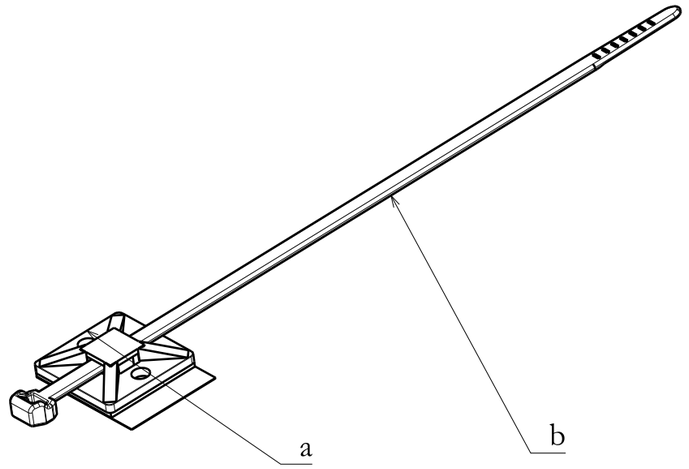

Bundle Dia
捆绑直径
SEE TABLE B

Tensile force
环拉力
SEE TABLE B

Material/材料:

SEE TABLE A

Dimension Units/尺寸单位
mm

PERFORMANCE/性能
SPECIFICATION/标准

TABLE A

Item	Part	Project No.	Material
a	MB3APT	GPN 11-0679	PA66
b	T30ROS	NT 822-99	PA66HS

TABLE B

Part Type 产品型号	Project No. 项目号	Length 长度 L	Width 宽度 B	Thickness 厚度 S	Bundle ΦMax 捆绑直径	Tensile force N Min
T30ROSMB3APT	GPN 17-2748	145±5	3.4±0.2	1.2±0.2	30	135

CATIA V5

The copyright of this drawing is reserved by HellermannTyton.it is issued on condition that it is not reproduced,copied or disclosed to a third party,either wholly or in part,without the consent of HellermannTyton.

Drawn/制图	Ben Lv	2018-01-03
Approved/审核	Roger Chang	2018-01-04

HellermannTyton
海尔曼太通（无锡）电器配件有限公司
(WUXI) Electrical Accessories Co.,Ltd.
Tel:+86-510-5282536
Fax:+86-510-5280112

Scale/比例 NO /无 2:1

Title/品名

T30ROSMB3APT

Drawing-No/图号
17-2748-001-CSC

Format/格式
A3