Revision No. 变更数	Revisions 变更事项	Changed 修改者	Date 日期	Approved 确认者	Date 日期

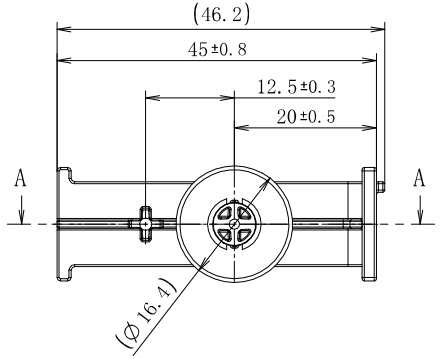

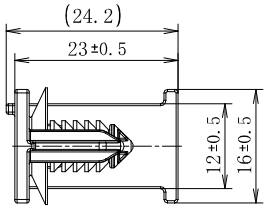

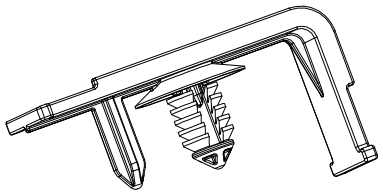

SCALE 1:1

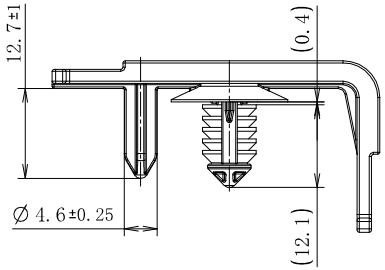

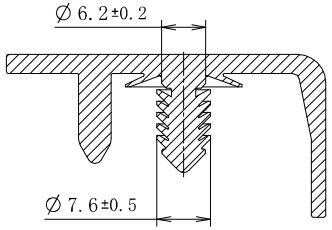

SECTION A-A

Dimensional Range	0-3	≥3-6	≥6-30	≥30-120	≥120-450	Angle
Tolerance	±0.2	±0.3	±0.5	±0.8	±2.0	±3°

Panel Thickness/
适配板厚
0.6-5.0mm

Hole Size/
适配孔径
Ø6.5±0.2mm

Material/材料
PA66 BK

NX 10.0

Drawn/制图	Josh.Liu	2018-01-25
Approved/审核	Roger.C	2018-01-25

Scale/比例 1:1

Title/品名
TC20LFT6.5-TS

Demension Units/
单位 MM

PERFORMANCE/性能
SPECIFICATION/标准

The copyright of this drawing is reserved by HELLERMANNTYTON.
it is issued on condition that it is not reproduced,copied or disclosed to a third party,either wholly or in part,without the consent of HELLERMANNTYTON.

HellermannTyton
海尔曼太通（无锡）电器配件有限公司
(WUXI) Electrical Accessories Co.,Ltd.
Tel:+86-510-85282536
Fax:+86-510-85280112

Drawing-No./图号
18-0278-001-CSC

Format 格式 A4

Page 页数 1/1