Revision NO 变更数	Revisions 变更项	Changed 修改者	Date 日期	Approved 确认者	Date 日期
1	Drawing Updated	Robert.Zhu	20180723	Kevin.Tang	20180723
2	Add color information	Robert.Zhu	20181121	Kevin.Tang	20181121

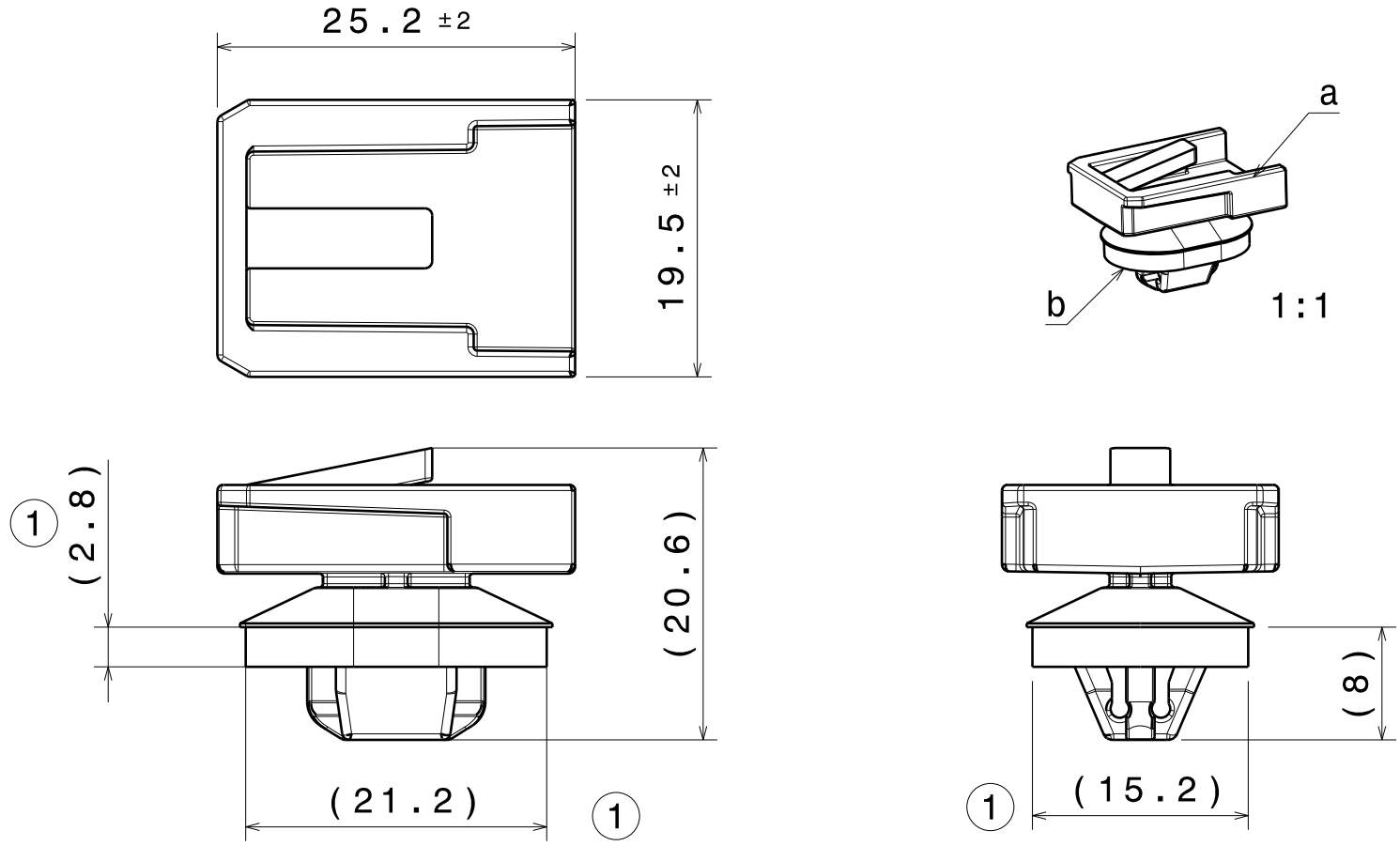

Color 颜色 2

Black

Hole Size 适用孔径

6.5×13±0.2mm

Bundle Dia 捆绑直径

-

Panel Thickness 适用板厚

0.6-1.5mm

Material 材料

a: PA66

b: CR C-4305

Dimension Units 尺寸单位mm

PERFORMANCE 性能 SPECIFICATION 标准

CATIA V5

Drawn/制图	Robert.Zhu	2018-03-22	Scale/比例	2:1
Approved/审核	Kevin.Tang	2018-03-22	Title/品名	CC5SFT65×130-MD

The copyright of this drawing is reserved by HellermannTyton.
it is issued on condition that it is not reproduced,copied or disclosed to a third party,either wholly or in part, without the consent of HellermannTyton.

HellermannTyton
海尔曼太通（无锡）电器配件有限公司
(WUXI) Electrical Accessories Co.,Ltd.
Tel:+86-510-5282536
Fax:+86-510-5280112

Drawing-No/图号: 18-1286-001-CSC

Format/格式: A4