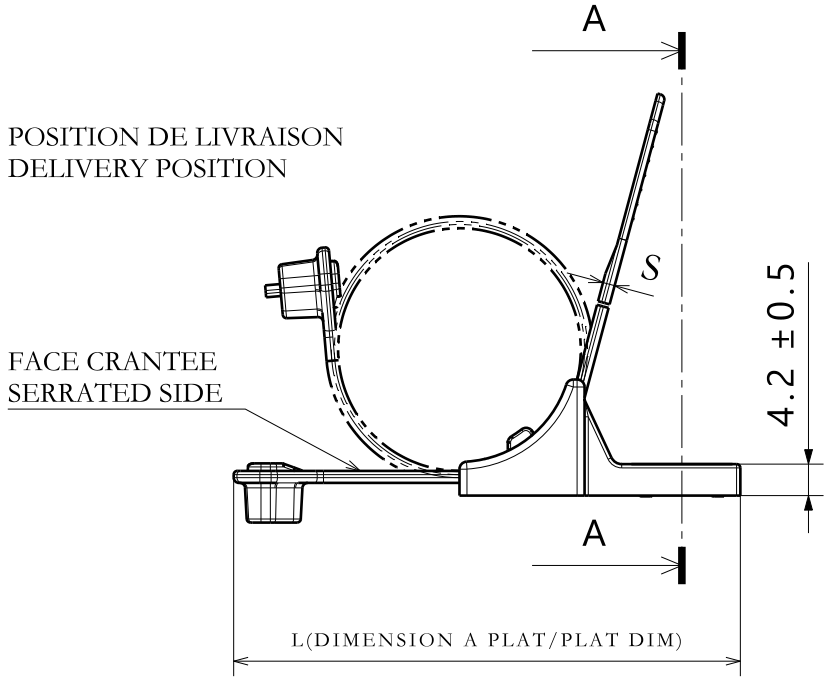

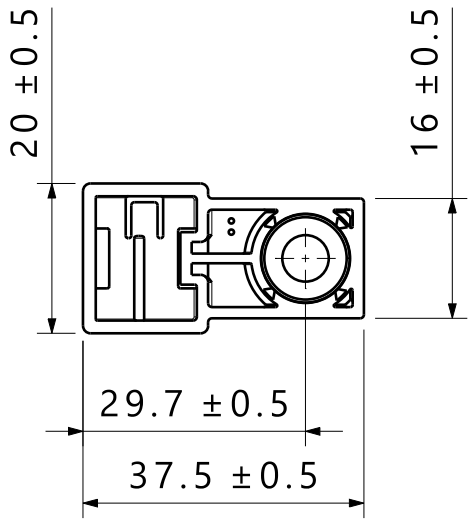

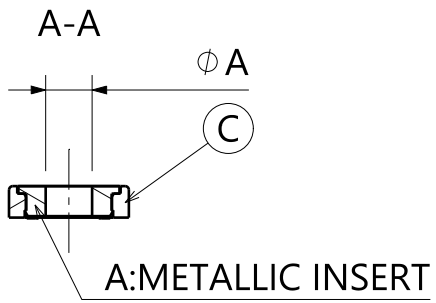

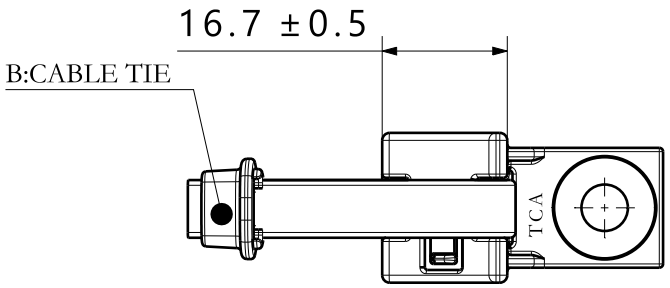

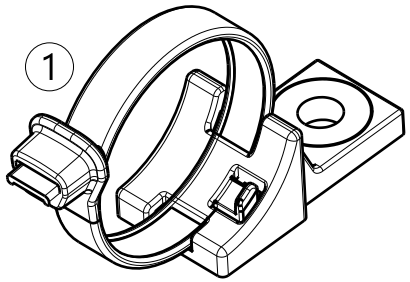

operating temperatures/
使用温度

PA66HS	-40℃ +105°C
PA66HIRHS	-40°C +105°C
PA46	-40°C +145°C (5000H)

Part Number/ 零件编号	Cable tie Material/扎带材质	Foot part Material/固定器材料	N.MINI/ 最小拉断力	L	D ±0.15 (2)	S ±0.2	ϕBundle Max/ 最大捆绑直径	Color/ 颜色	A ±0.2
X120SCPCM6	PA66HIRHS	PA66HIRHS	535N	225±10	7.7	1.6	ϕ55	BLACK	ϕ6.2
X120SCPCM6	PA66HS	PA66HIRHS	535N	225±10	7.7	1.6	ϕ55	BLACK	ϕ6.2

Revision Level		
Drawing	State	Part
02.1	Design Release	
Changed	Date (YYYY/MM/DD)	
Jun Sun	2022/04/19	
Approved	Date (YYYY/MM/DD)	
Roger Chang	2022/04/19	

Revision Record
1.Drawing update
2.Tolerance to ±0.15, was ±0.2

All drawing revisions are stored in CAD PDM database

The copyright of this drawing is reserved by HellermannTyton.

Drawn	Date (YYYY/MM/DD)
Lance.lv	2018/11/20
Approved	Date (YYYY/MM/DD)
Kevin.Tang	2018/11/20

Units mm

HellermannTyton
www.HellermannTyton.com

Title: X120SCPCM6

Drawing-No: 18-1291-001-CSC

Scale 1:1
Global Project Number 18-1291
Format A4
Sheet 1 / 1