SW

Revision level			Revision Record	Changed	Date	Approved	Date
Drawing	State	Part					
00.0	Design Release		SEE ECN# 015255	MHT	06/28/2019	CTF	06/28/2019

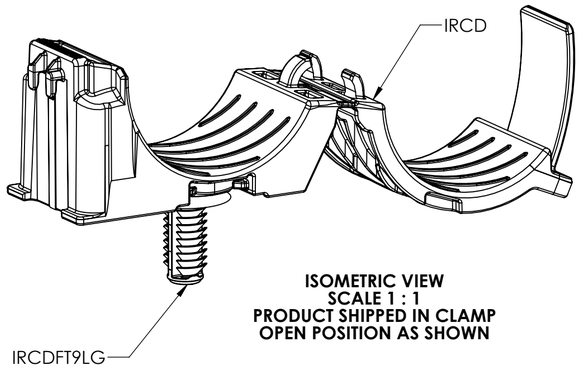

ISOMETRIC VIEW
SCALE 1 : 1
PRODUCT SHIPPED IN CLAMP
OPEN POSITION AS SHOWN

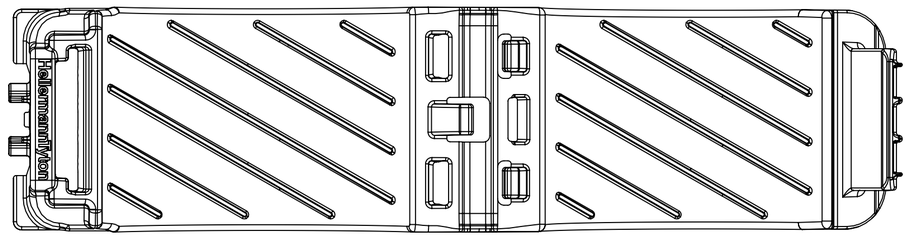

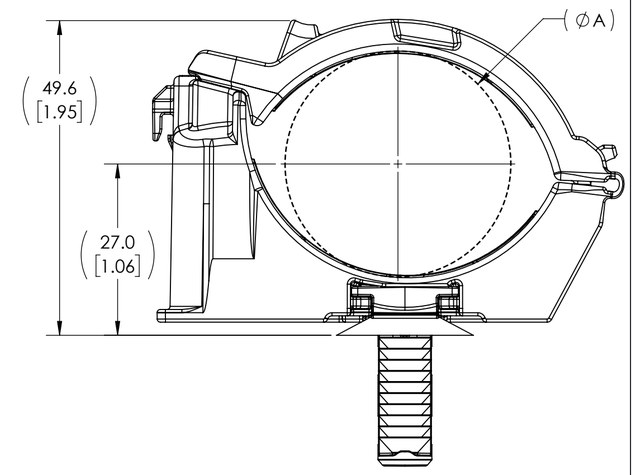

MINIMUM BUNDLE DIAMETER

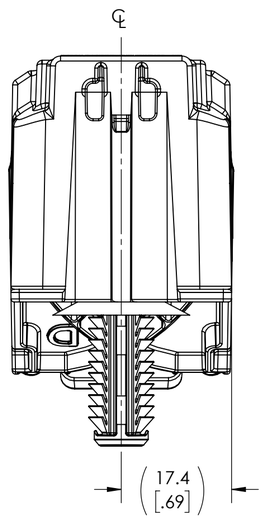

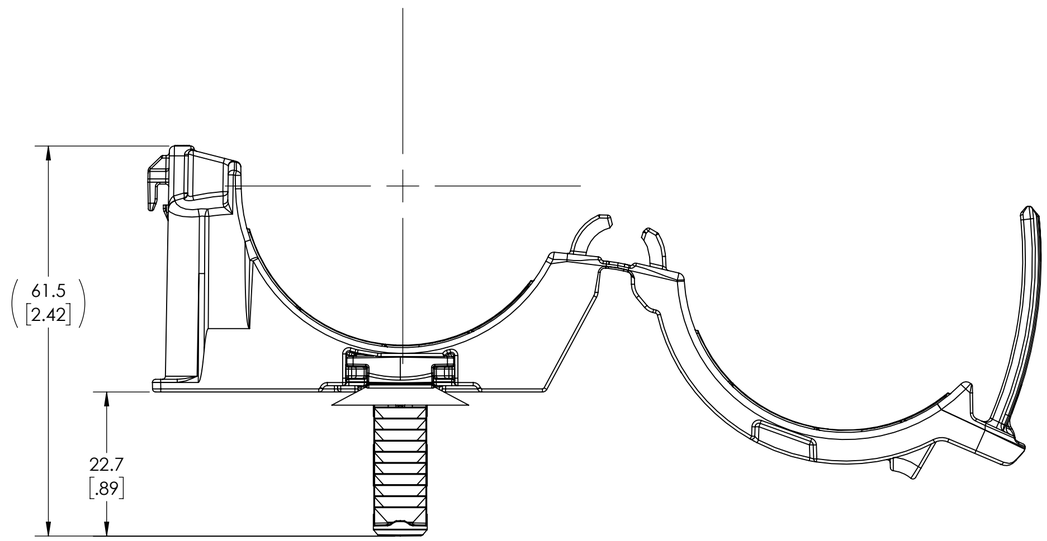

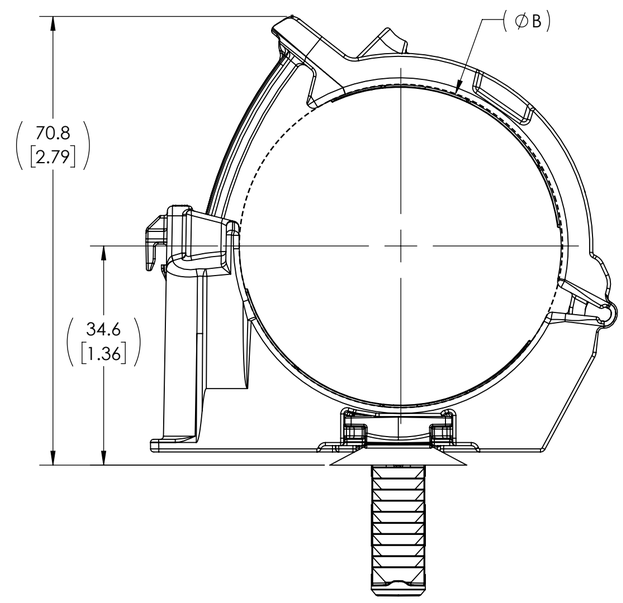

MAXIMUM BUNDLE DIAMETER

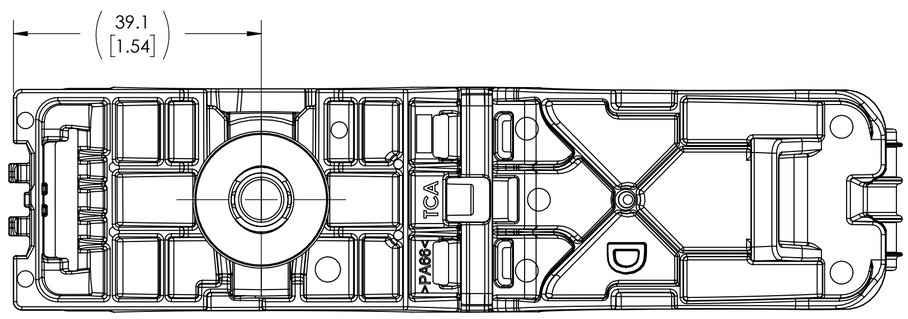

REFERENCE:

1. SHEET METAL THICKNESS RANGE: 0.6mm - 12.7mm
2. APPLICABLE HOLE SIZE:
   A. 9.0mm +/-0.4

GLOBAL PART DESCRIPTION	BUNDLE TYPES	(A) MINIMUM DIAMETER	(B) MAXIMUM DIAMETER	IRCD CLAMP			IRCFT9LG CONNECTOR CLIP		
				DRAWING	MATERIAL	COLOR	DRAWING	MATERIAL	COLOR
IRCDFT9LG-PA66HIRHSUV-BK	SOFT	36.0 [1.42]	51.0 [2.00]	16-1642-004-CSU	PA66HIRHSUV	BLACK	16-1645-050-CSU	PA66HIRHSUV	BLACK
	HARD	35.2 [1.39]	49.9 [1.96]						

Notes

Material
SEE CHART

Units: millimeters
Dimension without tolerances details to:
.XXX = ±.013
.XX = ±.13
.X = ±.3
None = ±.8
∠ = ±0.5°
Dimension Formatted mm/[in]

The copyright of this drawing is reserved by HellermannTyton. It is issued on condition that it is not reproduced, copied, or disclosed to a third party, either wholly or in part, without the consent of HellermannTyton.

Drawn	MHT	06/24/2019
Approved	CTF	06/24/2019

HellermannTyton
North America
Email: corp@htamericas.com
Web: www.hellermann.tyton.com

Article/Type-No: IRCDFT9LG
Title: INLINE RATCHET P-CLAMP D WITH 9mm LONG FIR TREE
Drawing-No: 19-0336-104-CSU
Production : Phase

Scale: 3:2
Project Number: PRP19-0336
Format: C
Sheet: 1/1