| Revision No. 变更数 | Revisions 变更事项 | Changed 修改者 | Date 日期 | Approved 确认者 | Date 日期 |
|---|---|---|---|---|---|
| ① | Add tolerance | Josh.Liu | 2019-08-12 | Kevin.T | 2019-08-12 |
| | | | | | |

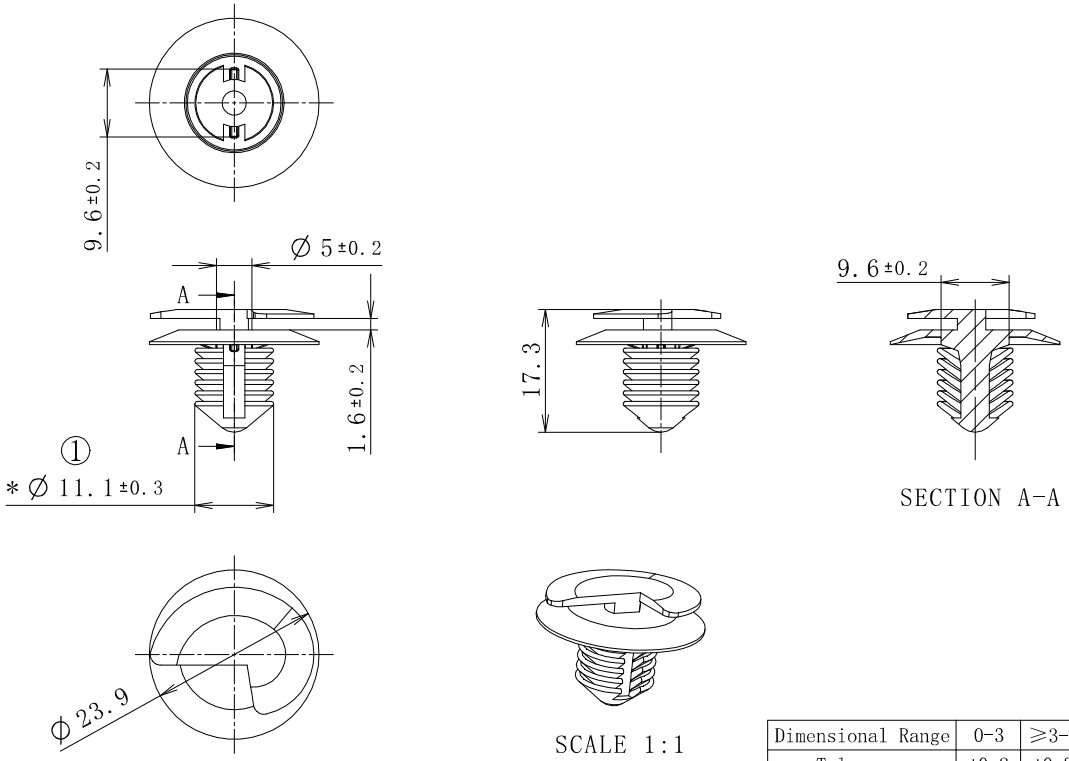


| Dimensional Range | 0-3 | ≥3-6 | ≥6-30 | ≥30-120 | ≥120-450 | Angle |
|---|---|---|---|---|---|---|
| Tolerance | ±0.2 | ±0.3 | ±0.5 | ±0.8 | ±2.0 | ±3° |

Panel Thickness/
适配板厚
0.6-5.0mm

Hole Size/
适配孔径
∅10±0.2mm

Material/材料
PA66HIRHS

NX 10.0

| | | |
|---|---|---|
| Drawn/制图 | Josh.Liu | 2019-05-20 |
| Approved/审核 | Kevin.T | 2019-05-20 |

Scale/比例 1:1

Demension Units/
单位 MM

PERFORMANCE/性能
SPECIFICATION/标准

The copyright of this drawing is reserved by HELLERMANNTYTON.
it is issued on condition that it is not reproduced,copied or disclosed to a third party,either wholly or in part,without the consent of HELLERMANNTYTON.

HellermannTyton
海尔曼太通（无锡）电器配件有限公司
(WUXI) Electrical Accessories Co.,Ltd.
Tel:+86-510-85282536
Fax:+86-510-85280112

Title/品名
PlugFT10-R

Drawing-No./图号
19-0388-001-CSC

Format 格式 A4

Page 页数 1/1