Revision NO 变更数	Revisions 变更项	Changed 修改者	Date 日期	Approved 确认者	Date 日期

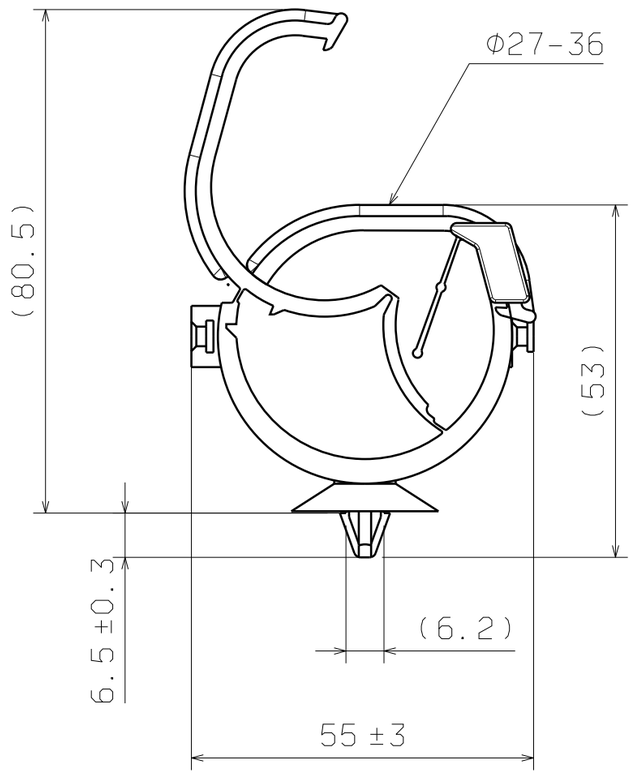

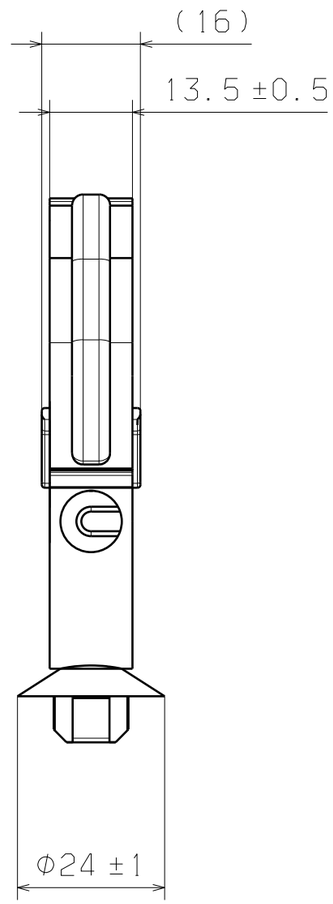

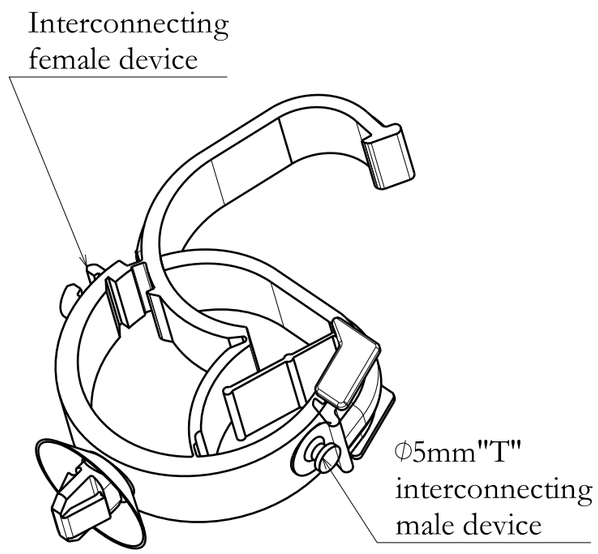

Hole Size
适用孔径
Φ6.2x12.2mm

Bundle Dia
捆绑直径
27-36mm

Panel Thickness
适用板厚
0.7-2mm

Material/材料:
PA66BK

Dimension Units/尺寸单位
mm

PERFORMANCE/性能
SPECIFICATION/标准

CATIA V5

Drawn/制图	Lance.Lv	2019-01-29
Approved/审核	Kevin.Tang	2019-01-29

Scale/比例 NO /无 1:1

Title/品名
IAHC4CH

The copyright of this drawing is reserved by HellermannTyton.it is issued on condition that it is not reproduced,copied or disclosed to a third party,either wholly or in part,without the consent of HellermannTyton.

HellermannTyton
海尔曼太通（无锡）电器配件有限公司
(WUXI) Electrical Accessories Co.,Ltd.
Tel:+86-510-5282536
Fax:+86-510-5280112

Drawing-No/图号
19-0392-001-CSC

Format/格式
A3