Revision NO 变更数	Revisions 变更项	Changed 修改者	Date 日期	Approved 确认者	Date 日期

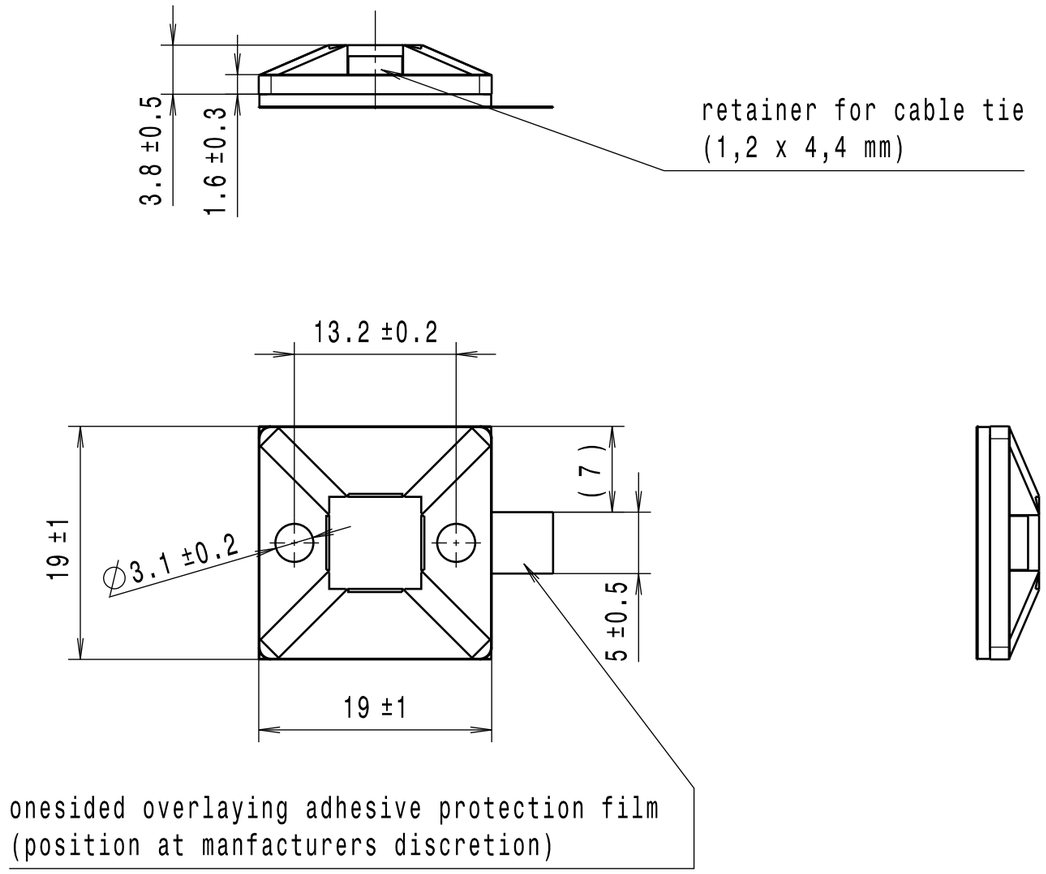

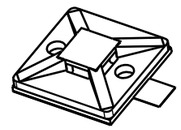

1:1

Material/材料:

a:PA6.6
b:SolidTack self adhesive pad (Acrylate PX)

Dimension Units/尺寸单位
mm

PERFORMANCE/性能
SPECIFICATION/标准

CAD

The copyright of this drawing is reserved by HellermannTyton.it is issued on condition that it is not reproduced,copied or disclosed to a third party,either wholly or in part,without the consent of HellermannTyton.

Drawn/制图	Robert.Zhu	2019-03-12
Approved/审核	Kevin.Tang	2019-03-12

HellermannTyton
海尔曼太通（无锡）电器配件有限公司
(WUXI) Electrical Accessories Co.,Ltd.
Tel:+86-510-5282536
Fax:+86-510-5280112

Scale/比例 NO /无 | 2:1;1:1

Title/品名

MB3APT-A-2

Drawing-No/图号
19-0577-002-CSC

Format/格式
A3