Revision NO 变更数	Revisions 变更项	Changed 修改者	Date 日期	Approved 确认者	Date 日期
1	Size update	Lance.Lv	2019-07-23	Kevin.Tang	2019-07-23
2	3D update	Lance.Lv	2019-09-16	Kevin.Tang	2019-09-16
3	Drawing update	Lance.Lv	2019-12-06	Kevin.Tang	2019-12-06
4	Drawing update	Lance.Lv	2021-03-02	Kevin.Tang	2021-03-02

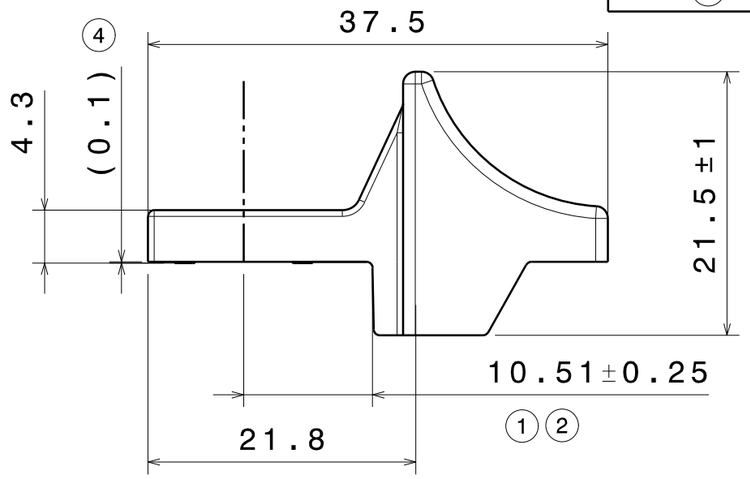

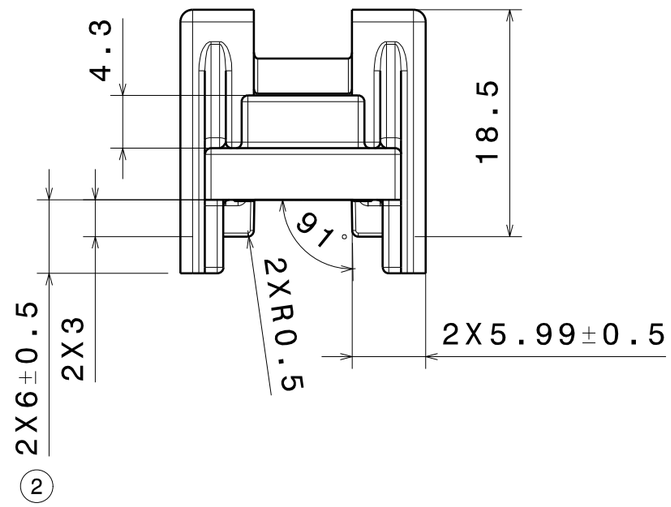

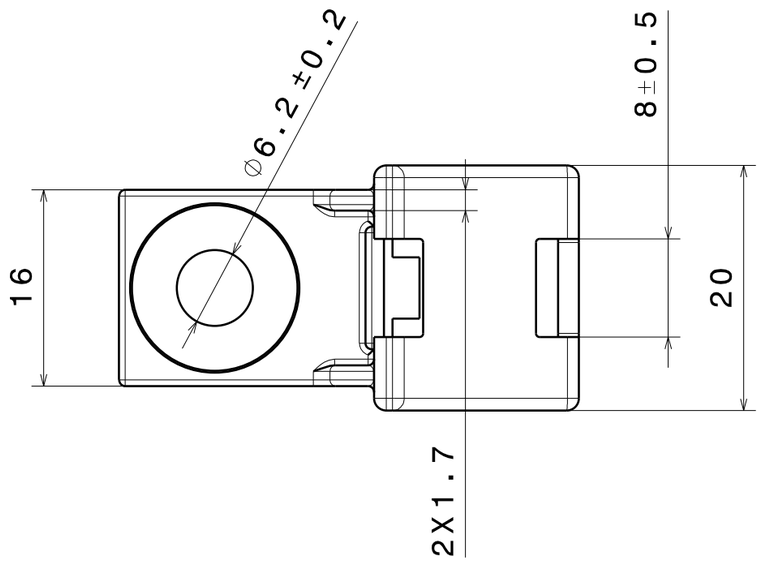

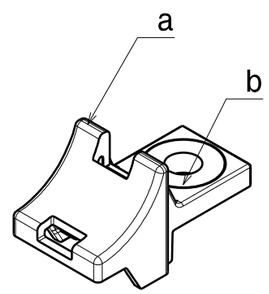

a:HDM6-TS-A-PH
b:bushing

Hole Size
适用孔径
M6

Color/颜色:
a:Silver
b:metal

Material/材料:
a:PPS
b:1215MS 3

Dimension Units/尺寸单位
mm

PERFORMANCE/性能
SPECIFICATION/标准

尺寸范围	>0.5-3	>3-6	>6-30	>30-120	角度
公差	±0.3	±0.5	±0.8	±1	±2°

CATIA V5

Drawn/制图	Lance.Lv	2019-05-09
Approved/审核	Kevin.Tang	2019-05-09

Scale/比例 NO /无

Title/品名

HDM6-TS-A

The copyright of this drawing is reserved by HellermannTyton.it is issued on condition that it is not reproduced,copied or disclosed to a third party,either wholly or in part,without the consent of HellermannTyton.

HellermannTyton
海尔曼太通（无锡）电器配件有限公司
(WUXI) Electrical Accessories Co.,Ltd.
Tel:+86-510-5282536
Fax:+86-510-5280112

Drawing-No/图号
19-1185-001-CSC

Format/格式
A3