Revision NO 变更数	Revisions 变更项	Changed 修改者	Date 日期	Approved 确认者	Date 日期

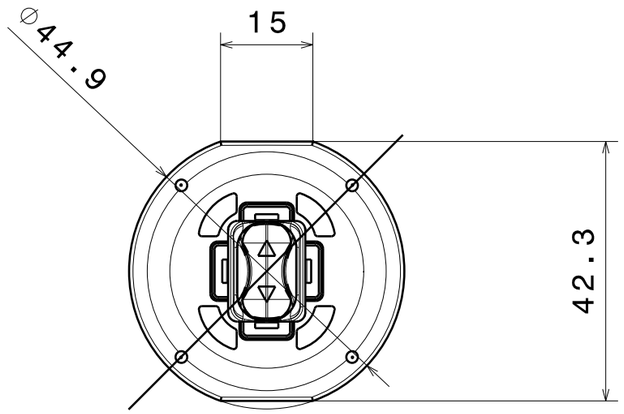

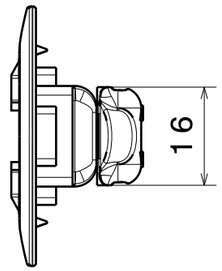

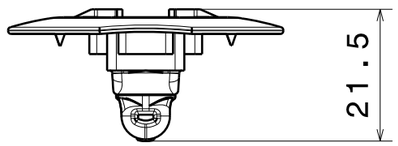

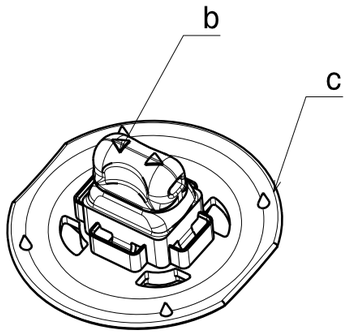

b:PLATE MAT SET LWR-B
c:PLATE MAT SET LWR-C

GENERAL DIMENSIONAL TOL	
>0-3	±0.20
>3-6	±0.29
>6-10	±0.35
>10-18	±0.42
>18-30	±0.50
>30-50	±0.60
>50-80	±0.90
>80-120	±1.25
>120-180	±1.45
>180-250	±1.60
ANGLE	±1°
ECCENTICIY	Φ0.15

Material/材料:
b:POM
c:POM

Dimension Units/尺寸单位
mm

PERFORMANCE/性能
SPECIFICATION/标准

CATIA V5

Drawn/制图	Lance.Lv	2019-06-20
Approved/审核	Kevin.Tang	2019-06-20

Scale/比例 NO /无 1:1

Title/品名

PLATE MAT LWR-B&C

The copyright of this drawing is reserved by HellermannTyton.it is issued on condition that it is not reproduced,copied or disclosed to a third party,either wholly or in part,without the consent of HellermannTyton.

HellermannTyton
海尔曼太通（无锡）电器配件有限公司
(WUXI) Electrical Accessories Co.,Ltd.
Tel:+86-510-5282536
Fax:+86-510-5280112

Drawing-No/图号
19-1212-001-CSC

Format/格式
A3