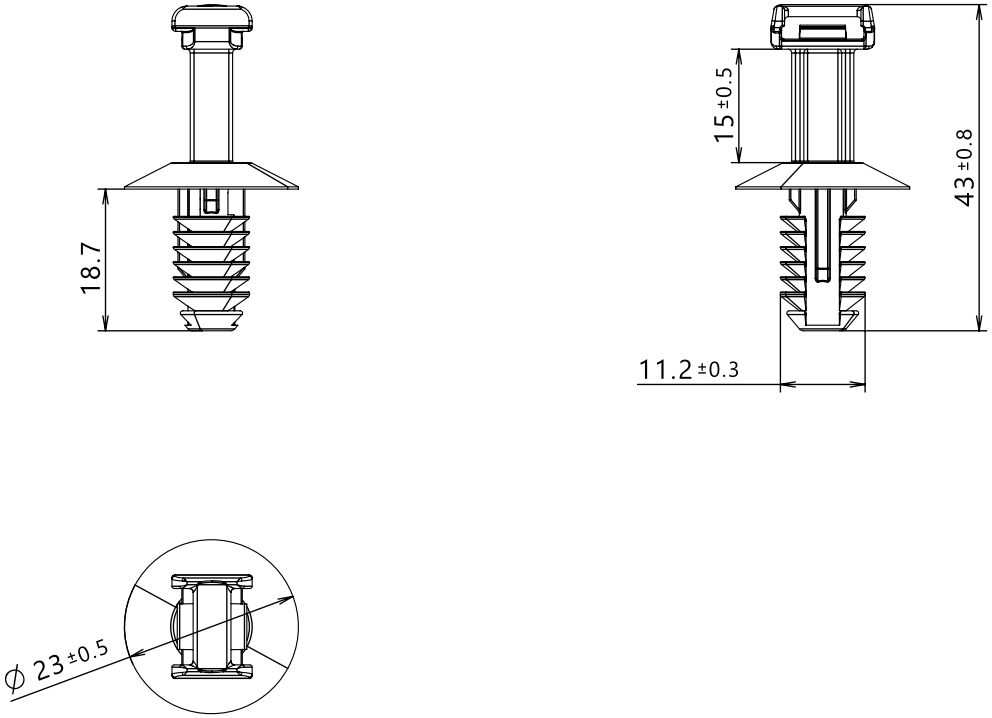

Product type/产品名称	Hole Size/适用孔径	Panel Thickness/适用板厚	Material/ 材料
FT9SO15	∅9.0-10.6mm	3.6-13.6mm	PA66HIRHS

Revision Level			Revision Record
Drawing	State	Part	
00.0	Design Release	-	
Changed	Date (YYYY/MM/DD)		
Approved	Date (YYYY/MM/DD)		

All drawing revisions are stored in CAD PDM database

The copyright of this drawing is reserved by HellermannTyton.

Drawn	Date (YYYY/MM/DD)
Walt.lv	2020-03-09
Approved	Date (YYYY/MM/DD)
Kevin.Tang	2020-03-09

Units: mm

HellermannTyton
www.HellermannTyton.com

Title: FT9SO15

Drawing-No: 19-1547-002-CSC

Scale: 1:1

Global Project Number: 19-1547

Format: A4

Sheet: 1 / 1