Revision NO 变更数	Revisions 变更项	Changed 修改者	Date 日期	Approved 确认者	Date 日期
1	Drawing update	Lance.Lv	20201110	Kevin.Tang	20201110

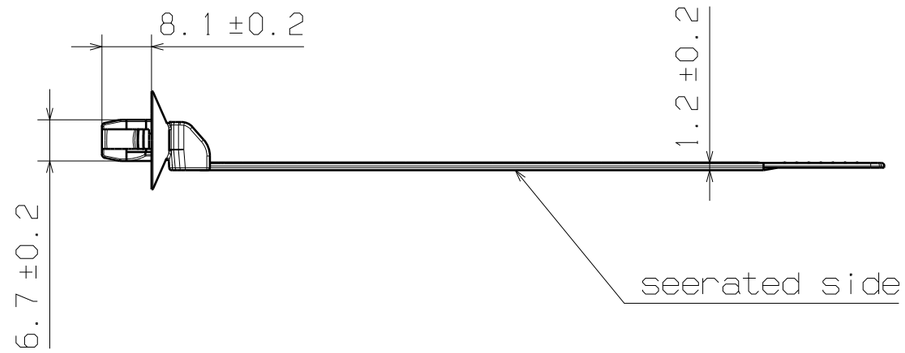

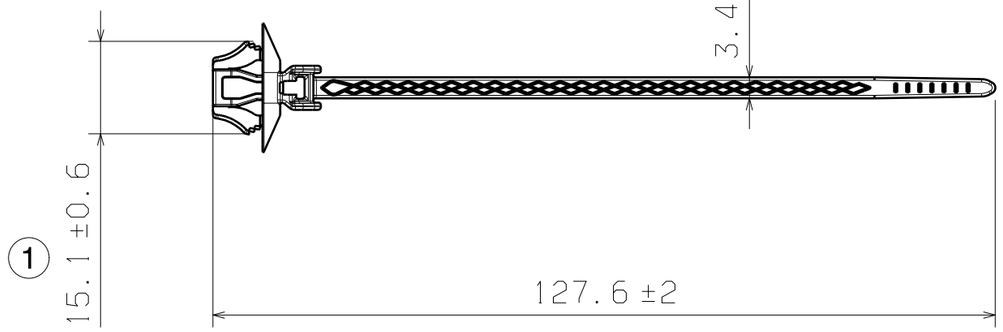

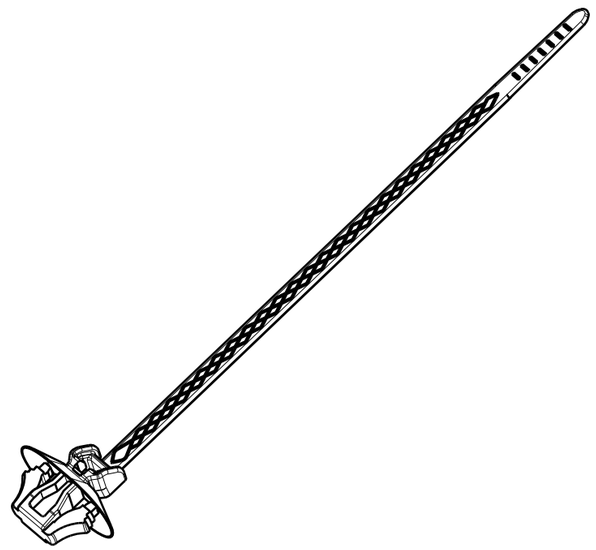

Part Name	Material
T30SOS-AS-SFT712S-E	PA66HSB
T30SOS-AS-SFT712S-E	PA66HIRHSB

1

Panel Thickness
适用板厚
0.6-2.6mm

Hole Size
适用孔径
7x12±0.2mm

Tensile Force
环形拉断力
200N

Bundle Dia
捆绑直径
1-25mm

Material/材料:
See table

Dimension Units/尺寸单位
mm

PERFORMANCE/性能
SPECIFICATION/标准

CATIA V5

Drawn/制图	Lance.Lv	2019-10-25
Approved/审核	Kevin.Tang	2019-10-25

Scale/比例 NO /无

Title/品名
T30SOS-AS-SFT712S-E

The copyright of this drawing is reserved by HellermannTyton.it is issued on condition that it is not reproduced,copied or disclosed to a third party,either wholly or in part,without the consent of HellermannTyton.

HellermannTyton
海尔曼太通（无锡）电器配件有限公司
(WUXI) Electrical Accessories Co.,Ltd.
Tel:+86-510-5282536
Fax:+86-510-5280112

Drawing-No/图号
19-1581-001-CSC

Format/格式
A3