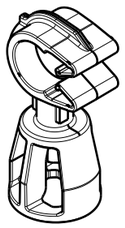

Isometric view

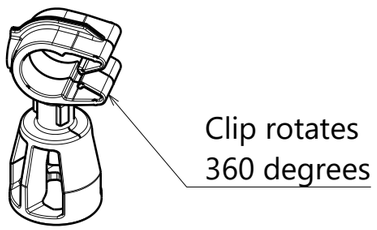

Isometric view
Rotated

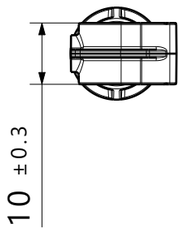

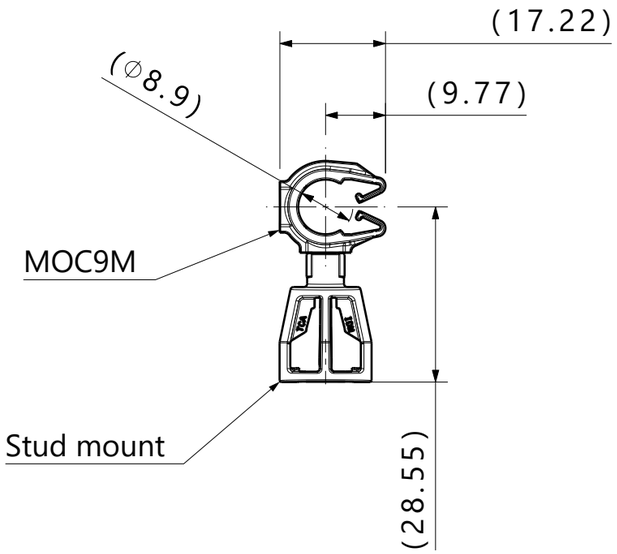

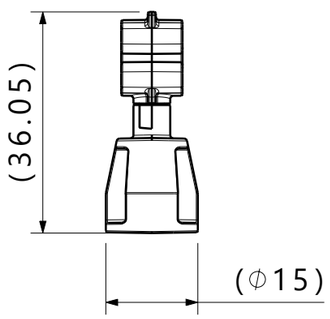

Reference:
Performance requirements at dry as molded:
1. Stud mount push on force: 45 newtons (10 lbf) max on each applicable stud size.
2. Stud mount pull off force: 110 newtons (25 lbf) min on each applicable stud size.

Notes:
1. Material: See chart
2. Material color: See chart
3. Maximum percent regrind permissible: 25%
4. Max allowable flash to be: 0.25mm
5. Max allowable mismatch to be: 0.1mm
6. Applicable stud size:
   - A. M5 x 0.8
   - B. T5
   - C. M6 x 1
   - D. T6

* Recommended sizes may differ depending on the application, product requirements, and materials used.

** Rotational orientation of clips upon delivery is not controlled

*** Patent: US D840,799 S, EU 003864313, CN 304373914 S

Diameter Range*		
Harness	Hose	Hard Pipe/Tube
8.5mm-10.0mm	8.0mm-10.0mm	9.0mm-10.0mm

Global Part Description	MOC9M***			Stud Mount		
	Drawing	Material	Color	Drawing	Material	Color
SMFMOC9M-PA66HIRHSUV-BK	16-0317-000-CSU	PA66HIRHSUV	Black	19-0295-001-CSU	PA66HIRHSUV	Black

Revision Level			Revision Record
Drawing	State	Part	ECN 016567
00.0	Design Release	-	
Changed	Date (YYYY/MM/DD)		
Klos	2021/09/22		
Approved	Date (YYYY/MM/DD)		
Karabon	2021/09/22		

All drawing revisions are stored in CAD PDM database

The copyright of this drawing is reserved by HellermannTyton.

Drawn	Date (YYYY/MM/DD)
Klos	2021/09/22
Approved	Date (YYYY/MM/DD)
Karabon	2021/09/22

Units: mm

HellermannTyton
www.HellermannTyton.com

Title: MOC9M coupled with a M5/M6 stud mount

Drawing-No: 19-1642-001-CSU

Scale: 1:1
Global Project Number: 19-1642
Format: A3
Sheet: 1 / 1