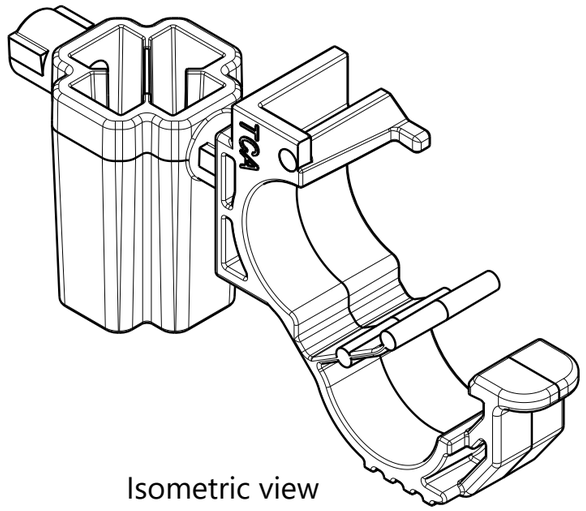

Isometric view

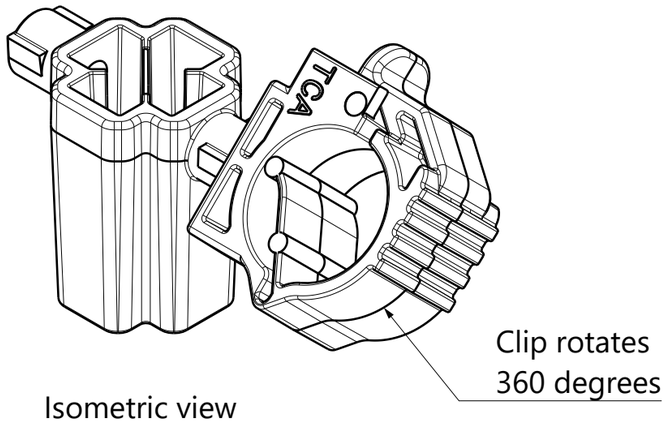

Isometric view
Closed & Rotated

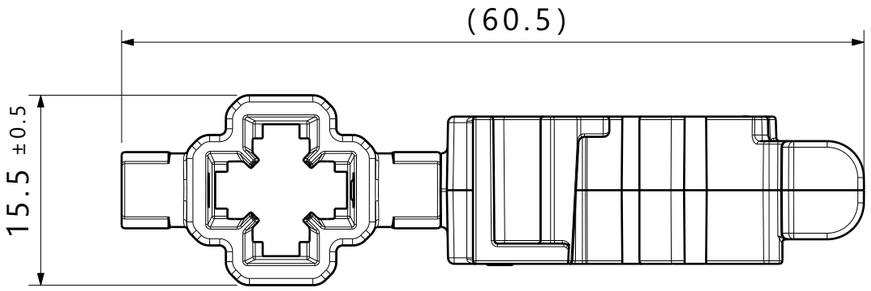

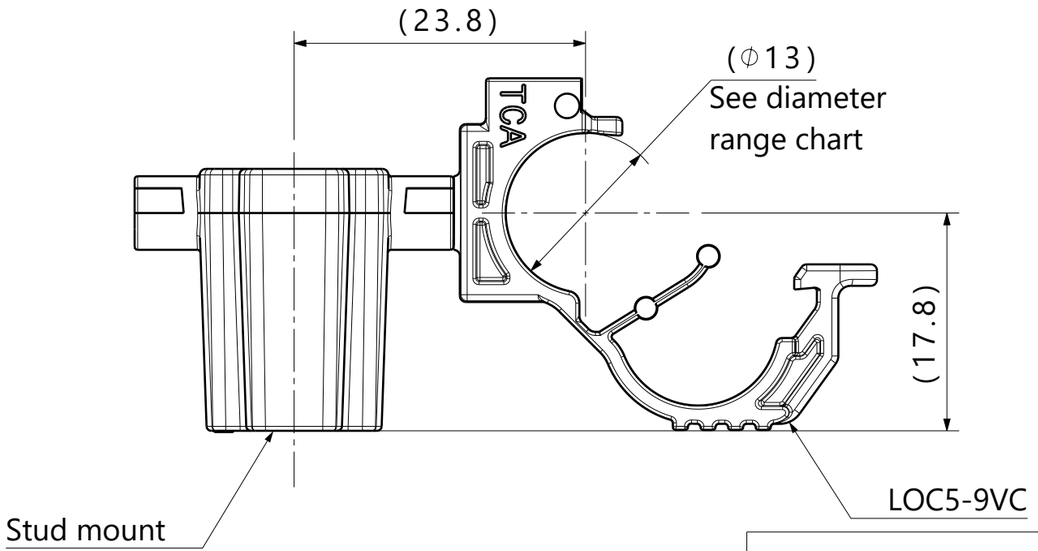

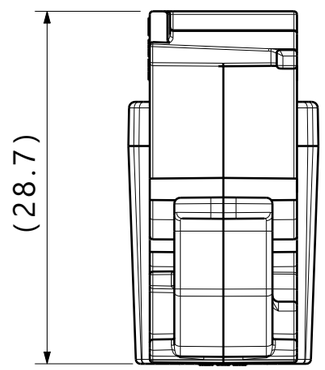

Reference:
Performance requirements at dry as molded
and to be tested at the component level:
1. Stud mount push on force: 45 newtons (10 lbf) max on each applicable stud size.
2. Stud mount pull off force: 110 newtons (25 lbf) min on each applicable stud size.

Notes:
1. Material: See chart
2. Material color: See chart
3. Maximum percent regrind permissible: 25%
4. Max allowable flash to be: 0.25mm
5. Max allowable mismatch to be: 0.1mm
6. Applicable stud size:
   A. M5 x 0.8
   B. T5
   C. M6 x 1
   D. T6

*Recommended sizes may differ depending on the application, product requirements, and materials used.

**Rotational orientation of clips upon delivery is not controlled

Diameter range		
Harness	Soft tube/ Hose	Pipe, Hard tube/ Hose, Cable
5.0mm - 10.0mm	5.0mm - 10.0mm	7.0mm - 10.0mm

Global Part Description	LOC5-9VC			Stud Mount		
	Drawing	Material	Color	Drawing	Material	Color
SMF2LOC5-9VC-PA66HIRHSUV-BK	12-0430-031-CSU	PA66HIRHSUV	Black	19-0239-001-CSU	PA66HIRHSUV	Black

Revision Level			Revision Record
Drawing	State	Part	ECN 016509
00.3	Design Release	-	
Changed	Date (YYYY/MM/DD)		
Rohde	2021/05/21		
Approved	Date (YYYY/MM/DD)		
Karabon	2021/05/21		

All drawing revisions are stored in CAD PDM database

The copyright of this drawing is reserved by HellermannTyton.

Drawn	Rohde	Date (YYYY/MM/DD) 2021/05/19
Approved	Karabon	Date (YYYY/MM/DD) 2021/05/19

Units: mm

HellermannTyton
www.HellermannTyton.com

Title: LOC5-9VC coupled with a M5/M6 stud mount

Drawing-No: **19-1690-001-CSU**

Scale: 2:1
Global Project Number: 19-1690
Format: A3
Sheet: 1 / 1