| Revision NO 变更数 | Revisions 变更项 | Changed 修改者 | Date 日期 | Approved 确认者 | Date 日期 |
|---|---|---|---|---|---|
| | | | | | |
| | | | | | |

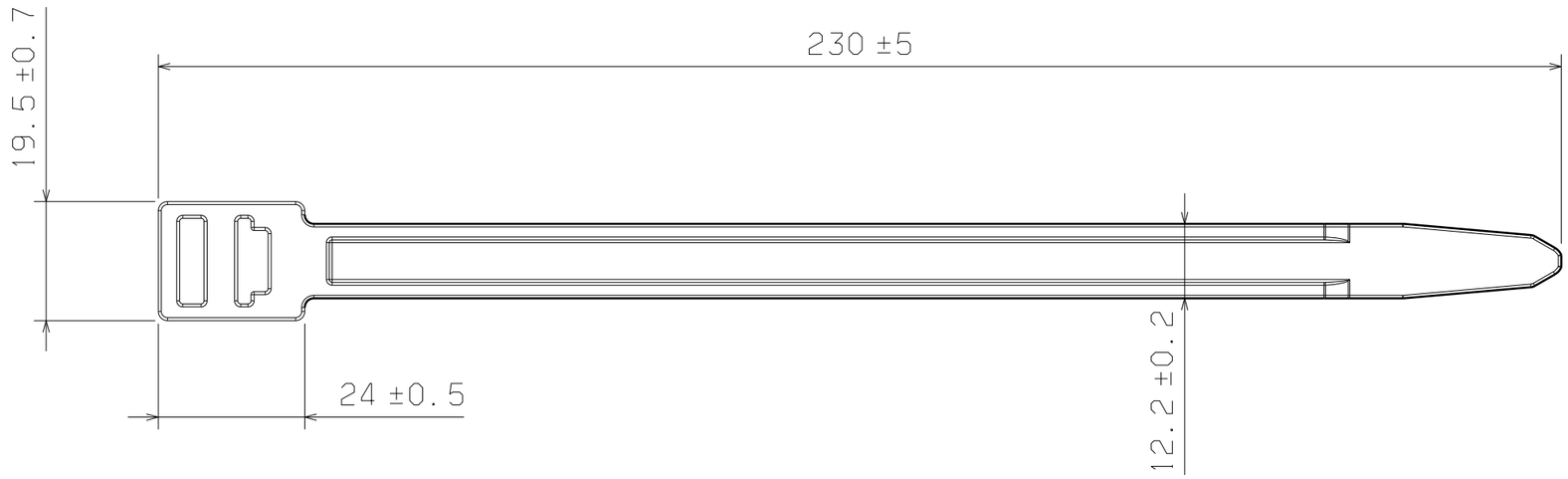

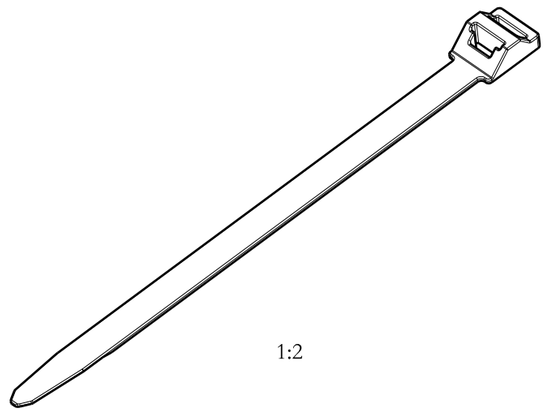


Tolerances
Dimension without tolerances details to:
未注尺寸公差:
DIN16901/140

Bundle Dia
捆绑直径
12-50mm

Material/材料:
PA66

Dimension Units/尺寸单位
mm

PERFORMANCE/性能
SPECIFICATION/标准

CAD

| | | | | |
|---|---|---|---|---|
| Drawn/制图 | Lance.Lv | 2020-03-30 | Scale/比例 NO /无 | 1:1 |
| Approved/审核 | Kevin.tang | 2020-03-31 | Title/品名 | |

The copyright of this drawing is reserved by HellermannTyton.it is issued on condition that it is not reproduced,copied or disclosed to a third party,either wholly or in part,without the consent of HellermannTyton.

HellermannTyton
海尔曼太通（无锡）电器配件有限公司
(WUXI) Electrical Accessories Co.,Ltd.
Tel:+86-510-5282536
Fax:+86-510-5280112

REL250S
RELEASABLE CABLE TIE

Drawing-No/图号
20-0667-001-CSC

Format/格式
A3