Revision NO 变更数	Revisions 变更项	Changed 修改者	Date 日期	Approved 确认者	Date 日期

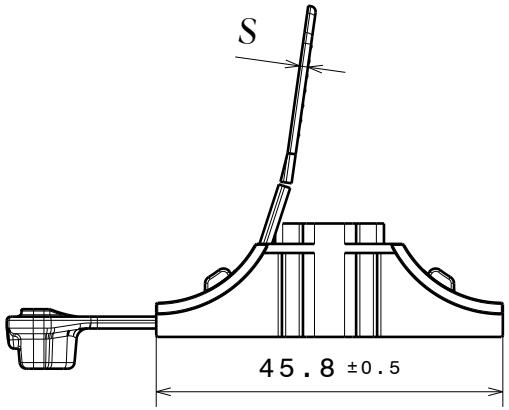

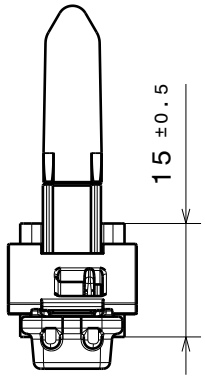

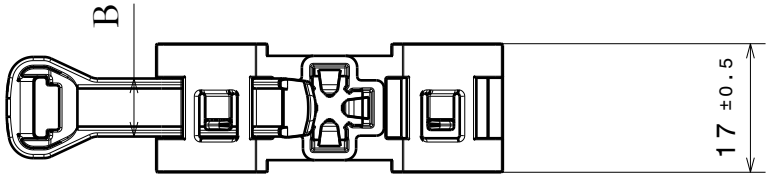

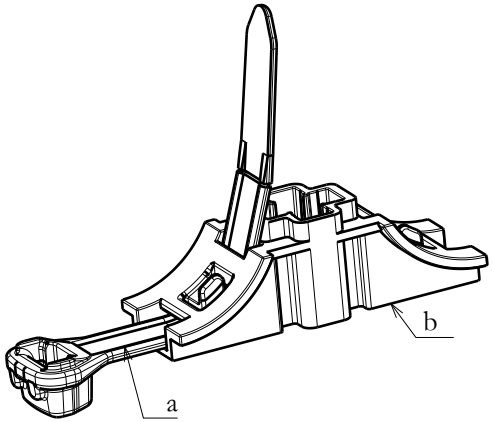

Product Type 产品型号	Length/长度 L±5	Width/宽度 B±0.15	Thickness/厚度 S±0.2	Bundle/捆绑 Φmm
X120SDSBS5-6-single	225	7.7	1.6	5-55

Loop Tensile
环形拉断力
535N

Stud Size
适用螺柱
T5/M5/M6

Bundle Dia
捆绑直径
See table

Material 材料
a:PA66
b:PA66

Dimension Units
尺寸单位mm

PERFORMANCE
性能
SPECIFICATION
标准

CAD

Drawn/制图	Vincent.Liu	2020-07-13
Approved/审核	Kevin.Tang	2020-07-13

Scale/比例 1:1

Title/品名

X120SDSBS5-6-single

The copyright of this drawing is reserved by HellermannTyton.
it is issued on condition that it is not reproduced,copied or disclosed to a third party,either wholly or in part, without the consent of HellermannTyton.

HellermannTyton
海尔曼太通（无锡）电器配件有限公司
(WUXI) Electrical Accessories Co.,Ltd.
Tel:+86-510-5282536
Fax:+86-510-5280112

Drawing-No/图号
20-0736-001-CSC

Format/格式
A4