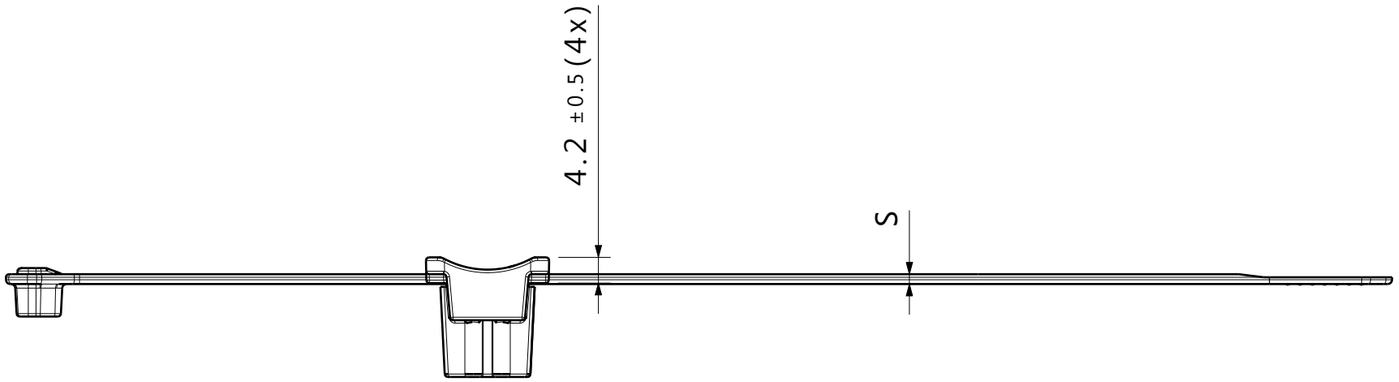

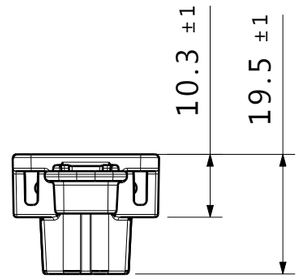

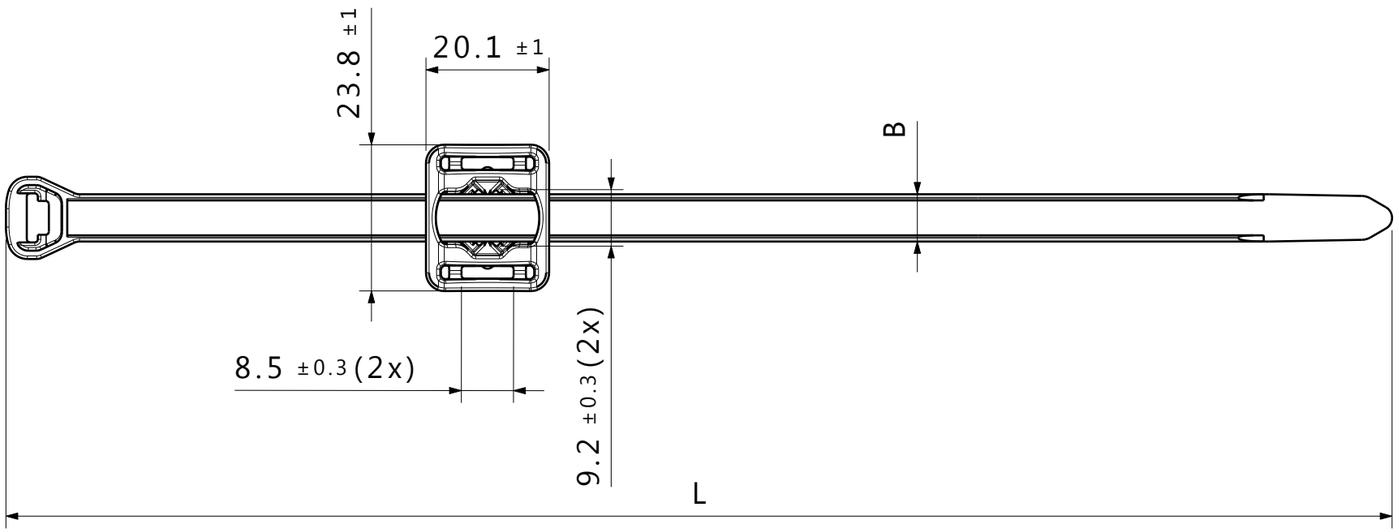

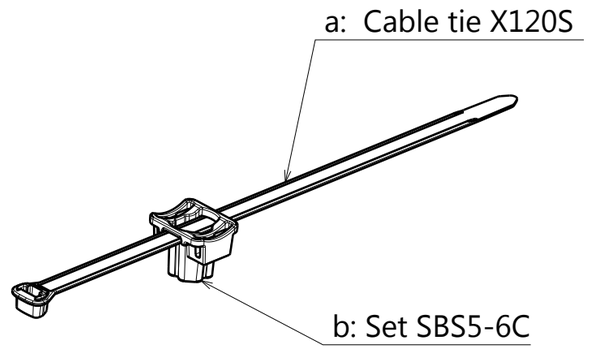

Isometric view
Scale: 1:2

Part Type	Length(L)	Width(B)	Thickness(S)	Tensile Force	Bundle Dim	Hole Size	Material	Color
X120SSBS5-6C-A	225±10mm	7.7±0.15mm	1.6±0.2mm	535N	⌀5-55mm	A: M6 B: M5 C: T5	a: PA66HS b: PA66HIRHS	a: BLACK b: BLACK

Revision Level			Revision Record
Drawing	State	Part	
00.0	Design Release		
Changed		Date (YYYY/MM/DD)	
Approved		Date (YYYY/MM/DD)	

All drawing revisions are stored in CAD PDM database

The copyright of this drawing is reserved by HellermannTyton.

Drawn	Madere.Ni	Date (YYYY/MM/DD) 2020/8/10
Approved	Kevin.Tang	Date (YYYY/MM/DD) 2020/8/10

Units: mm

HellermannTyton
www.HellermannTyton.com

Title: X120SSBS5-6C-A

Drawing-No: 20-0740-001-CSC

Scale: 1:1
Global Project Number: 20-0740
Format: A3
Sheet: 1 / 1