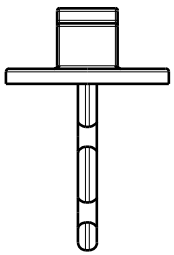

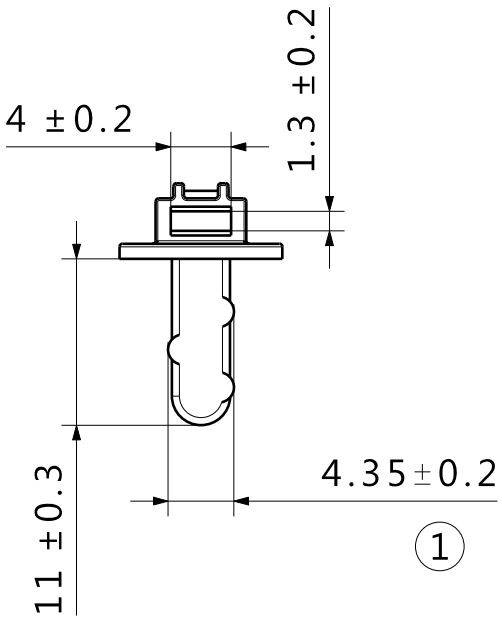

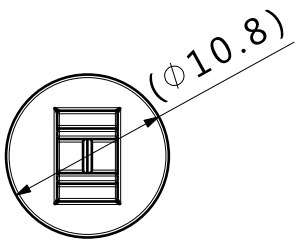

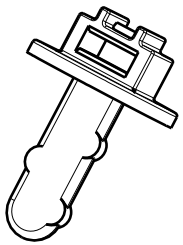

NOTE:

1, UNLESS OTHERWISE SPECIFIED TOLERANCE: +/-0.10
2, MATERIAL - GMW3038P-PA66-GF30 NYLON 6/6, HEAT STABILIZED IMPACT MODIFIED, COLOR - BLACK (NO REGRIND PERMISSIBLE) (ULTRAMID A3WG6, BK00564)
3, RESTRICTED AND REPORTABLE SUBSTANCES PRE GMW 3059
4, UNLESS OTHERWISE SPECIFIED ALL VIEWS ARE THIRD ANGULAR PROJECTION
5, CAD IS MASTER FOR ALL UNSPECIFIED DIMENSIONS
6, EJECTOR PIN AND GATE LOCATION MUST BE APPROVED BY ENGINEERING
7, NO FLASH PERMISSIBLE
8, REVISION LEVEL ON EJECTOR PIN LOCATION APPROVED BY ENGINEERING
9, Color: Black
10, Material: PA66+GF30

Revision Level			Revision Record
Drawing	State	Part	Tolerance update from ±0.3 to ±0.2
01.0	Design Release		
Changed	Date (YYYY/MM/DD)		
Lance.Lv	2020/11/19		
Approved	Date (YYYY/MM/DD)		
Kevin.Tang	2020/11/19		

All drawing revisions are stored in CAD PDM database

The copyright of this drawing is reserved by HellermannTyton.

Drawn	Date (YYYY/MM/DD)
Lance.Lv	2020/09/16
Approved	Date (YYYY/MM/DD)
Kevin.Tang	2020/09/16

Units: mm

HellermannTyton
www.HellermannTyton.com

Title: RETAINER M5

Drawing-No: 20-0745-001-CSC

Scale: 2:1
Global Project Number: 20-0745
Format: A4
Sheet: 1 / 1