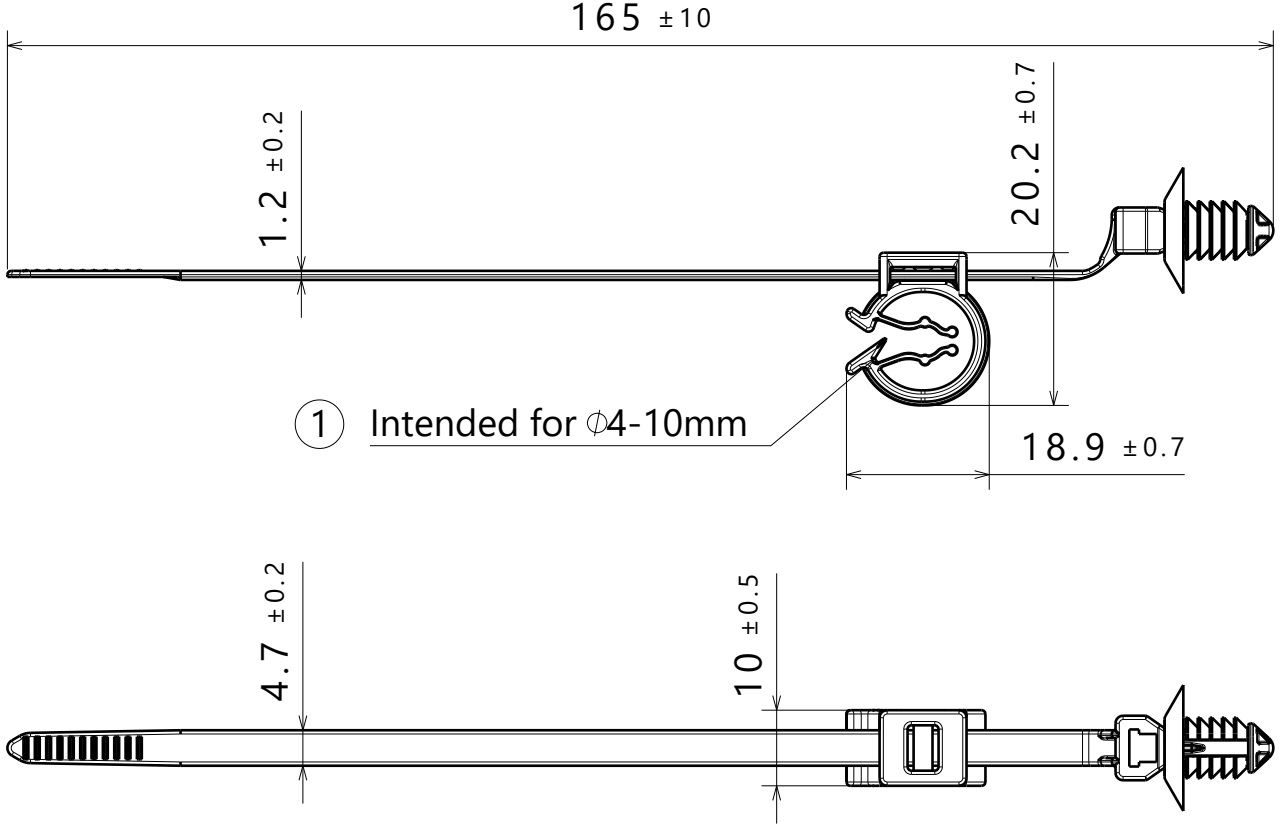

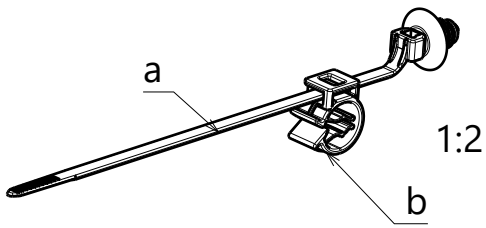

Product Type	Material	Color	Hole Size	Panel Thickness	Bundle Size
T50SOSFT7EOC1A	a: PA66HS b: PA66HIRHS	a: BK b: BK	ϕ7.0±0.2mm	6.0mm Max	ϕ30mm Max

Revision Level			Revision Record
Drawing	State	Part	Change the drawing number from 'QDQ2112-00A-00' to '21-3273-001-CSC'
01.1	Design Release	X	Add Information
Changed	Date (YYYY/MM/DD)		
Robert.Zhu	2021/11/16		
Approved	Date (YYYY/MM/DD)		
Roger.Chang	2021/11/16		

All drawing revisions are stored in CAD PDM database

The copyright of this drawing is reserved by HellermannTyton.

Drawn	Date (YYYY/MM/DD)
Roger.Chang	2013/10/15
Approved	Date (YYYY/MM/DD)
Kevin.Tang	2014/08/11

Units: mm

HellermannTyton
www.hellermanntyton.com

Title: T50SOSFT7EOC1A

Drawing-No: 21-3273-001-CSC

Scale: 1:1 1:2

Global Project Number: 21-3273

Format: A4

Sheet: 1/1